AO 98-OSS-03	Explorer Program, Medium-Class Explorers (MIDEX) and Missions of Opportunity		

Principal Investigator			
Dr.	**Kenneth**	**John**	**Johnston**
Title	First Name	Middle Name	Last Name

Department
Astrometry Department

Company/Institution
United States Naval Observatory

Street Address	City/Town	
3450 Massachusetts Ave., N.W.	**Washington**	
State	ZIP/Postal	Country
District of Columbia	**20392-5420**	**USA**
Telephone	Fax	E-Mail Address
(**202) 762-1513**	**(202) 762-1461**	**kjj@astro.usno.navy.mil**

Principal Investigator's Signature Date

Proposal Title
Full-Sky Astrometric Mapping Explorer (FAME)

Abstract

FAME is a space astrometry mission that offers the unique opportunity to measure the positions, proper motions, parallaxes, and photometry of 40,000,000 stars brighter than V=15th magnitude to unprecedented accuracy. The astrometric accuracy will range between 50 and 500 microarcseconds, dependent on the magnitude. The instrument will rotate in a scanning survey pattern similar to the *Hipparcos* project. The spacecraft will be geosynchronous with the precession primarily driven by solar radiation pressure.

The resulting data will provide a definitive calibration of absolute luminosities of "standard candles" for defining distance scales, calibrate the absolute luminosities of solar neighborhood stars, provide a definitive determination of the frequency of solar-type stars orbited by brown dwarfs and giant planets, provide proper motions and distances for individual stars in star-forming regions, assess the abundance of dark matter in the galactic disk, and become an astrometric and photometric catalog. This mission is a complement to, and source of input data, for the Space Interferometry Mission (SIM).

Institutional Endorsement

Name of Authorizing Official
Dr. Kenneth J. Johnston

Title
Scientific Director

Address
United States Naval Observatory, 3450 Massachusetts Ave., N.W. Washington, D.C. 20392-5420

Signature Date

Table of Contents

Section	Title	Page
1.	**Executive Summary**	**1-1**
1.1	FAME Program	1-1
1.2	Science Objectives	1-1
1.3	FAME Contributions to NASA Themes and Strategic Plan	1-1
1.4	Technical Approach	1-1
1.5	Spacecraft	1-2
1.6	Educational, Technology, and Public Outreach	1-2
1.6.1	Education	1-2
1.6.2	New Technologies	1-2
1.7	Public Outreach	1-3
1.8	Management	1-3
1.8.1	FAME Team	1-3
1.8.2	Management Approach	1-3
1.8.3	Risk Management	1-3
1.8.4	Master Schedule	1-4
1.9	Cost Estimate	1-4
1.10	DoD Interest	1-4
1.11	Changes Made During Concept Study	1-4
	Science Objectives	1-5
	Mission Overview	1-5
	Science Payload	1-5
	Key Spacecraft Characteristics	1-5
	Mission Operations	1-5
	Anticipated Launch Vehicle	1-5
	Mission Management	1-5
	Schedule	1-5
	Cost Estimate	1-5
2.	**Science Investigation Description**	**2-1**
2.1	Science Goals and Objectives	2-1
2.1.1	Science Description	2-1
2.1.2	Objectives and Significant Aspects	2-2
2.1.3	Investigation Approach	2-7
2.1.4	Minimum Science Mission	2-8
2.2	Science Implementation	2-9
2.2.1	Instrumentation	2-9
2.2.2	Mission	2-13
2.2.3	Data Analysis and Archiving	2-14
2.2.4	Science Team	2-19
3.	**Education, Outreach, Technology, and Small Disadvantaged Business Plan**	**3-1**
3.1	Educational Program Activities	3-1
3.1.1	Management Structure	3-1
3.1.2	Summary of E/PO Activity Summary	3-2
3.1.3	Strategies to Fulfill the E/PO Objectives	3-2
3.1.4	Evaluation Plan	3-4
3.2	Public Awareness	3-5
3.2.1	Media Relations	3-5
3.2.2	Public Outreach	3-5
3.3	SB/SDB Subcontracting Plan	3-5
3.4	New Technology	3-6
4.	**Technical Approach**	**4-1**

Table of Contents (Continued)

Section	Title	Page
4.1	Flow Down of Science Requirements	4-1
4.1.1	Mission Design	4-1
4.1.2	Mission Phases	4-1
4.1.3	Launch Vehicle and Trajectories	4-3
4.1.4	Communications Networks	4-4
4.1.5	Summary Trade Studies	4-4
4.1.6	Top-Level Mission Requirements	4-5
4.2	Spacecraft Bus and Payload Systems	4-5
4.2.1	System Description	4-5
4.2.2	Design Approach	4-6
4.2.3	Spacecraft Overview	4-6
4.2.4	Flight Heritage	4-6
4.3	Spacecraft Bus Subsystems	4-6
4.3.1	Spacecraft Bus Overview	4-6
4.3.2	Attitude Determination and Control System (ADCS)	4-7
4.3.3	Electrical Power Subsystem	4-13
4.3.4	RF Telecommunications	4-16
4.3.5	Command, Telemetry, and Data Handling Subsystem	4-17
4.3.6	Flight Software	4-20
4.3.7	Thermal Control Subsystem	4-22
4.3.8	Structures Subsystem	4-25
4.3.9	Mechanisms Subsystem	4-26
4.3.10	Reaction Control Subsystem	4-28
4.4	Science Payload	4-31
4.4.1	Instrument Overview	4-31
4.4.2	Optics	4-33
4.4.3	Focal Plane Assembly	4-38
4.4.4	Instrument Structure	4-43
4.4.5	Electronics And Data Processing	4-46
4.4.6	Thermal Design and Analysis	4-51
4.4.7	Error Budget	4-55
4.5	Payload Integration	4-56
4.5.1	Instrument Integration and Test	4-56
4.5.2	Instrument Interface	4-57
4.6	Manufacturing, Integration, and Test	4-58
4.6.1	Verification and Test	4-58
4.6.2	Hardware Procurement and Fabrication Processes	4-58
4.6.3	Software Development Processes	4-58
4.6.4	Systems Level Integration	4-59
4.6.5	Tooling, Fixtures, and GSE	4-59
4.6.6	System Level Electrical Integration	4-59
4.6.7	Software Integration	4-59
4.6.8	System Level Mechanical Testing	4-59
4.6.9	System Level Electrical Testing	4-60
4.6.10	Manufacturing, Integration, and Test Schedule	4-60
4.7	MO&DA Systems	4-60
4.7.1	Overview	4-60
4.7.2	Management Approach	4-60
4.7.3	Wide Area Networking	4-61
4.7.4	Staffing Plans	4-61
4.7.5	GDS Facility Reuse	4-61

Table of Contents (Continued)

Section	Title	Page
4.7.6	Deep Space Network	4-62
4.7.7	Mission Unique Facilities	4-63
4.7.8	Communication, Tracking and Ground Support	4-64
4.7.9	Spectrum Management	4-64
4.7.10	Software Systems	4-64
4.7.11	Low Cost Operations	4-65
4.7.12	Existing Facilities and Processes	4-65
4.8	Facilities	4-65
4.8.1	Modifications and Upgrades	4-65
4.8.2	Spaceflight Processing Facilities	4-65
4.8.3	LMMS Facilities	4-66
4.9	Product Assurance and Safety	4-66
4.9.1	MAR Guidelines	4-67
4.9.2	Reviews	4-68
4.9.3	Safety Assurance	4-69
4.9.4	Design Assurance	4-70
4.9.5	New Technology	4-71
5.	**Management Plan**	**5-1**
5.1	Team Member Responsibilities	5-1
5.1.1	Organizational Structure	5-1
5.1.2	Key Personnel	5-3
5.2	Management Processes and Plans	5-3
5.2.1	Management Processes	5-3
5.3	Schedules and Work Flows	5-5
5.4	Risk Management	5-6
5.4.1	Integrated Financial Performance Measurements	5-6
5.4.2	Reserve and Margins	5-6
5.5	Government Services and Facilities	5-7
5.6	Reporting and Reviews	5-7
6.	**Technical Definition (Phase B) Plan**	**6-1**
6.1	Plans and Products	6-1
6.1.1	Plans	6-1
6.1.2	Products	6-1
6.2	Key Mission Trade-offs and Options	6-1
7.	**Cost Plan**	**7-1**
7.1	SF-1411 Contract Pricing	7-1
7.2	Basis of Estimate	7-1
7.3	Total Mission Cost	7-1
7.4	Time-Phased Cost Breakdown by WBS (Phase B/C/D)	7-1
7.5	Fiscal Year Costs in Fixed FY98 Dollars	7-1
7.6	Mission Cost Reserves	7-1
7.7	Recurring and Non-Recurring Costs	7-1
7.8	Full Cost Accounting	7-16
7.9	Inflation Index	7-16
7.10	Detailed Costing for Phase B/C/D	7-16
7.10.1	Work Breakdown Structure	7-16
7.10.2	Workforce Staffing Plan	7-16
7.11	Proposal Pricing Techniques	7-16
7.11.1	NASA Launch Services	7-20
7.11.2	Proposal Costing Assumptions	7-20

Table of Contents (Continued)

Section	Title	Page
7.12	Phase B/C/D Time-Phased Cost Summary	7-20
7.12.1	Basis of Labor-Hour Estimates	7-20
7.12.2	Direct Productive Person-Hour Rates and Schedules	7-21
7.12.3	Schedule of Direct Labor Rates	7-21
7.12.4	LMMS ATC Labor Rates	7-21
7.12.5	Government Approved Labor Rates	7-21
7.12.6	Civil Service Labor Contributions	7-21
7.12.7	Direct Materials	7-21
7.12.8	Subcontracts	7-21
7.12.9	Major SubContracting Actions and Adjustments	7-21
7.12.10	Other Direct Costs	7-24
7.12.11	Indirect Costs	7-24
7.12.12	Fee Arrangements	7-25
7.13	MO&DA (Phase E) Cost Estimate	7-25
7.13.1	Work Breakdown Structure	7-25
7.13.2	Cost Estimating Technique	7-25
7.13.3	Workforce Staffing Plan	7-25
7.14	Time Phased Cost Breakdown by WBS (Phase E)	7-25
7.15	Total Mission Cost Estimate	7-25
8.	**Launch Delay**	**8-1**
8.1	Science Implications	8-1
8.2	Implementation Plan Changes	8-1
8.3	Cost Plan Changes	8-1
A.	**Resumes**	**A-1**
A.1	William F. van Altena	A-1
A.2	John N. Bahcall	A-2
A.3	Charles A. Beichman	A-3
A.4	Alan P. Boss	A-4
A.5	David Van Buren	A-5
A.6	George D. Gatewood	A-6
A.7	Marvin E. Germain	A-7
A.8	Andrew Gould	A-8
A.9	Thomas P. Greene	A-9
A.10	Hugh C. Harris	A-10
A.11	Scott D. Horner	A-11
A.12	John P. Huchra	A-12
A.13	William H. Jefferys	A-13
A.14	Mark S. Johnson	A-14
A.15	Kenneth J. Johnston	A-15
A.16	David W. Latham	A-16
A.17	David G. Monet	A-17
A.18	Marc A. Murison	A-18
A.19	James D. Phillips	A-19
A.20	Robert D. Reasenberg	A-20
A.21	Siegfried Röser	A-21
A.22	Philip Michael Sadler	A-22
A.23	Allan Sandage	A-23
A.24	P. Kenneth Seidelmann	A-24
A.25	Michael Shao	A-25
A.26	Irwin I. Shapiro	A-26

Table of Contents (Continued)

Section	Title	Page
A.27	Sean E. Urban	A-27
A.28	Richard H. Vassar	A-28
A.29	Christian de Vegt	A-29
A.30	Donald G. York	A-30
B.	**Letters of Endorsement**	**B-1**
C.	**NASA PI Proposing Teams**	**C-1**
D.	**Mission Definition and Requirements Agreement (MDRA)**	**D-1**
D.1	FAME Mission Overview	D-1
D.2	FAME Level 1 Requirements	D-1
D.2.1	Science Requirements	D-1
D.2.2	Other Level 1 Requirements	D-1
D.2.3	Level 1 Program Cost Commitments	D-3
D.2.4	Level 1 Schedule Milestones	D-3
D.3	FAME Mission and Project Requirements	D-3
D.3.1	Proprietary Science Rights	D-3
D.3.2	Management Approach	D-3
D.3.3	Progress Reporting	D-3
D.3.4	Contracting Approach	D-3
D.3.5	Contract Performance Incentives	D-5
D.3.6	LMMS Contract Incentives	D-5
D.3.7	Policy Compliance	D-5
D.3.8	Safety, Reliability, and Quality Assurance	D-5
D.3.9	Project-Specific Facilities	D-6
D.4	Mission Responsibilities	D-6
D.4.1	US Naval Observatory	D-6
D.4.2	Naval Research Laboratory	D-6
D.4.3	Lockheed Martin Missiles and Space Advanced Technology Center	D-6
D.4.4	Smithsonian Astrophysical Observatory	D-6
D.5	NASA Responsibilities	D-7
D.6	Reporting and Independent Reviews	D-7
E.	**Standard Form 1411**	**E-1**
F.	**Certifications**	**F-1**
G.	**Statement of Work (SOW)**	**G-1**
G.1	Phase B—Preliminary Design	G-1
G.2	Phase C—Design Phase	G-1
G.3	Phase D—Development Phase	G-1
G.4	Phase E—Mission Operations and Data Analysis (MO&DA)	G-2
H.	**Incentive Fee Plan**	**H-1**
H.1	Background	H-1
H.2	Requirements Traceability	H-1
H.3	Phase B, Technical Definition Phase	H-1
H.4	Phase C/DE, Design, Development, and MO&DA Phases	H-1
H.5	Plan—General	H-1
H.5.1	Cost and Technical Performance	H-1
H.5.2	Incentive Fee Plan—Cost Share	H-1
H.5.3	Incentive Fee Plan—Performance Share	H-2
H.5.4	Catastrophic or Instrument Failure	H-2
I.	**Relevant Experience and Past Performance**	**I-1**

Table of Contents (Continued)

Section	Title	Page
I.1	United States Naval Observatory	I-1
I.2	Lockheed Martin Missiles and Space (LMMS)	I-1
I.3	Naval Research Laboratory (NRL)	I-5
J.	**International Agreements**	**J-1**
K.	**References**	**K-1**
L.	**Acronyms List**	**L-1**

List of Figures

Number	Title	Page
Figure 2-1	Hippacros and FAME Observation Coverage in the Milky Way	2-1
Figure 2-2	Layout of CCDs in Focal Plane	2-11
Figure 2-3	QE Curve of EEV 42-80 CCDs	2-12
Figure 2-4	Precession Torque and Period	2-14
Figure 2-5	Data Analysis and Archival	2-15
FOLDOUT 1:		
Figure A	Sloan Filter Set With & Without Atmosphere	2-20
Figure B	FAME Scan Strategy	2-20
Figure C	Stellar Distances vs. Magnitude for Selected Science Targets	2-20
Figure D	FAME Observing Concept	2-20
Figure 4-1	ADCS Block Diagram	4-9
Figure 4-2	Independent Review Letter	4-9
Figure 4-3	Momentum Vector Precession	4-11
Figure 4-4	Sun Angle Variation	4-11
Figure 4-5	Sun Shield Sweep & Cs Variation	4-12
Figure 4-6	Trim Tab Sweep and Cs Variation	4-12
Figure 4-7	Trim Tab & Shield Sweep Variation	4-12
Figure 4-8	Trim Tab Sweep and CG Variation	4-13
Figure 4-9	EPS Block Diagram	4-14
Figure 4-10	Battery Depth of Discharge	4-15
Figure 4-11	OCB Block Diagram	4-15
Figure 4-12	RF Telecom Block Diagram	4-16
Figure 4-13	Antenna Pattern	4-17
Figure 4-14	ISC Block Diagram	4-18
Figure 4-15	Baseline S/W Architecture	4-20
Figure 4-16	TCS Design Approach	4-23
Figure 4-17	Sun Shield Partially Deployed	4-27
Figure 4-18	FAME RCS Schematic	4-29
Figure 4-19	RCS Layout	4-29
Figure 4-20	Optical Design—Side View	4-34
Figure 4-21	FAME Optical Design—Top View	4-34
Figure 4-22	Optical Performance (1.1° FOV)	4-34
Figure 4-23	Optical Subsystem	4-35
Figure 4-24	Mounting and Alignment of Compound Mirror	4-37
Figure 4-25	FPA CCD Layout	4-38
Figure 4-26	Transmissibility	4-39
Figure 4-27	Star Energy vs. Ghost Energy (at Edge of Field)	4-39
Figure 4-28	FAME CCD Schematic	4-41
Figure 4-29	CCD Centroiding Experiment	4-41
Figure 4-30	CCD Focal Plane Assembly	4-42
Figure 4-31	Layout of FPA Assembly	4-43
Figure 4-32	Structure Assembly	4-46
Figure 4-33	Instrument Electronics Block Diagram	4-47
Figure 4-34	Electronic Assembly	4-51
Figure 4-35	Compound Mirror Temperature During Steady State Conditions	4-54
Figure 4-36	Primary Mirror Temperature During Steady State Operation	4-54
Figure 4-37	Focal Plane Assembly During Steady State Operation (with the Control Heater Off)	4-54

List of Figures (Continued)

Number	Title	Page
Figure 4-38	Earthshine/Albedo Effects On Compound Mirror Over One Rotation	4-54
Figure 4-39	Earthshine/Albedo Effects On FPA Over One Rotation	4-55
Figure 4-40	Fame Instrumental Effects	4-56
Figure 4-41	Instrument I&T Flows	4-57
Figure 4-42	BP Architecture for FAME Support	4-62
Figure 4-43	Existing QA Program Flows Are Tailored for FAME Phase C/D Activities	4-68
Figure 4-44	Product Assurance Program and Configuration Management Milestones	4-69
FOLDOUT 2:		
Figure A	Major Mission Events	4-72
Figure B	Launch Configuration	4-72
Figure C	Orbit Geometry	4-72
Figure D	FAME GTO Configuration	4-72
Figure E	Operational Configuration	4-72
Figure F	Ground Station Coverage (2˚ Minimum Elevation)	4-72
FOLDOUT 3:		
Figure A	FAME Block Diagram	4-73
Figure B	FAME Exploded View	4-73
Figure C	System I&T Flow	4-73
FOLDOUT 4:		
Figure A	FAME Instrument	4-74
FOLDOUT 5:		
Figure A	Mission Operations Block Diagram	4-75
Figure 5-1	FAME Organizational Structure	5-1
FOLDOUT 6:		
Figure A	FAME's Streamlined Document Tree Captures Project Requirements	5-8
FOLDOUT 7:		
Figure A	FAME Master Schedule	5-9
Figure 7-1	Total Mission Cost Funding Profile, Time-Phased by Fiscal Year (CSR Guidelines, Figure 1)	7-2
Figure 7-2	Time Phased Cost Breakdown by WBS and Major Cost Category (CSR Guidelines, Figure 2)	7-3
Figure 7-3	Fiscal Year Costs in FY 1998 Dollars (CSR Guidelines, Figure 3)	7-15
Figure 7-4	Phased C/D Development Costs in FY98 Dollars (CSR Guidelines, Figure 4)	7-17
Figure D-1	Total Mission Cost Funding Profile, Time-Phased by Fiscal Year (CSR Guidelines, Figure 1)	D-4

List of Tables

Number	Title	Page
Table 2-1	FAME CCD Specifications	2-12
Table 2-2	Instrument Processor Functions	2-13
Table 2-3	Expected Photometric Uncertainty	2-18
Table 2-4	Precision of the Mean Magnitudes	2-18
Table 2-5	FAME Science Team	2-19
FOLDOUT 1:		
Table A	Field Cepheid Variables Within 1 kpc	2-20
Table B	RR Lyrae Stars with Parallax Measurement Errors <10%	2-20
Table C	Cluster Cepheid Variables	2-20
Table 3-1	Summary of E/PO Activities	3-2
Table 3-2	FAME PAO Officers	3-5
Table 3-3	Press Distribution Services	3-5
Table 3-4	SB/SDB Subcontracting Records	3-6
Table 3-5	NRL's SB/SDB Goals	3-6
Table 4-1	Science Requirements Flow Down	4-1
Table 4-2	Mission Phases	4-2
Table 4-3	Mission Sequences and Timeline	4-2
Table 4-4	Early On-Orbit Events	4-2
Table 4-5	Summary Trade Studies	4-4
Table 4-6	Top-Level Mission Requirements	4-5
Table 4-7	S/C Bus Requirements Summary	4-8
Table 4-8	ADCS Requirements	4-9
Table 4-9	ADCS Control Modes	4-9
Table 4-10	Environmental Torques	4-11
Table 4-11	Miscellaneous Disturbances	4-11
Table 4-12	ADCS Sensor Specs.	4-13
Table 4-13	Control Mode Requirements	4-13
Table 4-14	Average Power (Watts)	4-15
Table 4-15	Integrated S/C Controller Modules	4-18
Table 4-16	SCIO CMD and TLM Resources	4-20
Table 4-17	ISC Module Mass and Power	4-20
Table 4-18	Microcontroller Functionality	4-21
Table 4-19	FSW Reuse	4-21
Table 4-20	CPU Processing Requirements	4-22
Table 4-21	CPU RAM Requirements (kb)	4-22
Table 4-22	CPU EEPROM Rqmts (kb)	4-22
Table 4-23	UDM Cntrl. RAM Rqmts (kb)	4-22
Table 4-24	UDM Cntrl. EEPROM Rqmts (kb)	4-22
Table 4-25	ADCS Cntrl. RAM Rqmts (kb)	4-23
Table 4-26	ADCS Cntrl. EEPROM Rqmts (kb)	4-23
Table 4-27	Component Temperature Rqmts.	4-23
Table 4-28	Heater Power Requirements	4-23
Table 4-29	Temp. Predictions and Margins	4-25
Table 4-30	Major Mechanical Trades	4-26
Table 4-31	FAME Mechanisms Test Matrix	4-27
Table 4-32	Propellant Budget	4-31
Table 4-33	Instrument Master Equipment List	4-32
Table 4-34	FAME Instrument Requirements	4-32

List of Tables (Continued)

Number	Title	Page
Table 4-35	FAME 15-Meter Focal Length Optical Design Requirements	4-34
Table 4-36	Design Improvements	4-35
Table 4-37	Image Motion Optical Stability	4-35
Table 4-38	Fab and Assembly Risks	4-35
Table 4-39	Mirror Specifications	4-37
Table 4-40	FPA Window Specifications	4-37
Table 4-41	Optical Component Dimensions	4-37
Table 4-42	FPA Design Changes	4-38
Table 4-43	Low Emissivity Coating	4-38
Table 4-44	Window Risks and Mitigation	4-39
Table 4-45	FAME CCD Requirements and Capabilities	4-40
Table 4-46	List of Candidate CCD Vendors	4-41
Table 4-47	Risk Levels and Mitigation	4-42
Table 4-48	CCD Alignment Requirement	4-43
Table 4-49	Instrument CSR Design Summary	4-43
Table 4-50	Trade Study Shows Clear Advantage for Catalog Vs. Threshold Based Extraction	4-47
Table 4-51	PGS Gain for 3 Volt ADC Input	4-50
Table 4-52	Improvements to the Thermal Subsystem Since the Original Proposal	4-52
Table 4-53	Our Design Minimizes Deformations in the Optical System to Acceptable Levels	4-52
Table 4-54	All Key Thermal Requirements are Satisfied	4-52
Table 4-55	Thermal Control Heater Modes	4-55
Table 4-56	FAME Accuracies	4-56
Table 4-57	Averaging Characteristics of Major Systematic Error sources	4-56
Table 4-58	E-O Tests	4-57
Table 4-59	Tests Follow MIL-STD-1540	4-60
Table 4-60	Mandatory Workmanship Spec's	4-69
FOLDOUT 2:		
Table A	FAME Equipment Manifest Listing	4-73
FOLDOUT 5:		
Table A	Uplink Budget (Omni-Mode, GEO)	4-75
Table B	Downlink Budget (409 kb/s, GEO)	4-75
Table C	Downlink Budget (800 bps, GEO)	4-75
Table D	MOC Staffing	4-75
Table 5-1	Team Member Responsibilities	5-2
Table 5-2	Key Personnel & Advisory Teams	5-3
Table 5-3	Relevant Institutional Experience	5-3
Table 5-4	Monthly Report Content	5-5
Table 5-5	Defined CM Processes	5-6
Table 5-6	.Critical EEE Leadtimes	5-6
Table 5-7	Descope Option	5-6
Table 5-8	New Technology Qualification	5-6
Table 5-9	Reserves & Funded Schedule Margins	5-7
FOLDOUT 6:		
Table A	Summary of Key Personnel Roles, Experience, and Time Commitment	5-8
Table B	Design Reviews	5-8
Table C	Top 10 Risks, Mitigation Approach, and Scientific Impact	5-8
Table 6-1	System Studies	6-2
Table 6-2	Phase B Products	6-2

List of Tables (Continued)

Number	Title	Page
Table 6-3	Phase B Deliverables	6-3
Table 7-1	CSR Adjustment to TMC (FY98$)	7-1
Table 7-2	Management Cost Reserves	7-16
Table 7-3	WBS Dictionary	7-18
Table 7-4	LV Cost Reconciliation	7-20
Table 7-5	Schedule of Direct Labor Rates	7-22
Table 8-1	Delayed Schedule	8-1
Table 8-2	Program Costs, Delayed Schedule	8-2
Table D-1	Level 1 Science Requirements	D-2
Table D-2	Other FAME Level 1 Requirements	D-2
Table D-3	Constrained Phase Budgets	D-5
Table D-4	Schedule Milestones	D-5

1. Executive Summary

1.1 FAME Program. FAME will provide the positions, proper motions, parallaxes, and photometry of nearly all stars as faint as 15th visual magnitude with accuracies of 50 microarcseconds (μas) at 9th visual magnitude and 500 μas at 15th visual magnitude. Stars will be observed with the Sloan Digital Sky Survey g', r', i', and z' filters for photometric magnitudes. This is accomplished by a scanning survey instrument evolved from *Hipparcos* with a mission life of 2.5 years and an extended mission to 5 years.

1.2 Science Objectives. Results of this survey will definitively address five key scientific objectives having far-reaching astrophysical and cosmological significance:

❒ Definitive calibration of the absolute luminosities of the "standard candles" (the galactic Cepheid variables and the RR Lyrae stars) that are fundamental in defining the distance scale to nearby galaxies and clusters of galaxies;

❒ Calibration of the absolute luminosities of solar-neighborhood stars, including Population I and II stars, thus enabling diverse studies of stellar evolution and other important science. In the case of Population II subdwarfs, this will allow the determination of the distances and ages of galactic and extragalactic globular clusters with unprecedented accuracy;

❒ Definitive determination of the frequency of solar-type stars orbited by brown dwarf companions in the mass range 10 to 80 Mjup and with orbital periods as long as about twice the duration of the mission. This will include an exploration of the transition region between giant planets and brown dwarfs, which appears to be in the range 10 to 30 Mjup;

❒ Proper motions and distances for individual stars in star forming regions for determinations of ages and kinematics; and

❒ A study of the kinematic properties of the survey of 4 x 10^7 stars within 2.5 kpc of the Sun, and in particular, assess the abundance and distribution of dark matter in the galactic disk with much greater sensitivity and completeness than previously possible.

The proposed investigation will also provide a catalog of star positions, proper motions, and colors that will meet spacecraft navigation, guidance, and attitude control needs of the United States Department of Defense (DoD) and NASA.

1.3 FAME Contributions to NASA Themes and Strategic Plan. FAME will provide vital and fundamental astronomical data that address key questions of three NASA themes:

❒ For *Origins*, FAME will provide (a) the distance scale for the standard candles, (b) knowledge of stars in the solar neighborhood, and (c) detection of hundreds of substellar companions of solar-type stars, with a definitive exploration of the transition region between giant planets and brown dwarfs and the identification of prime targets for further research with SIM and TPF.

❒ For *Structure and Evolution of the Universe*, FAME will provide (a) knowledge of stellar properties of our galaxy, (b) distance scale for the standard candles, (c) accurate reference for Gravity Probe B, (d) distribution of matter in the disk of our galaxy, and (e) understanding of how both dark and luminous matter determine the geometry and fate of the universe.

❒ For *Solar System*, FAME will (a) detect or help identify other planetary systems, (b) help us understand how stars and other planetary systems form together, and (c) provide a very accurate reference frame for solar system observations.

1.4 Technical Approach. Much like *Hipparcos*, FAME is based on the use of a telescope that looks at two fields of view (FOVs) separated by a fixed basic angle (81.5 deg). The spacecraft rotates at a rate of once every 40 minutes and measures stars along a spiral. The rotation axis of the spacecraft precesses around the Sun direction 18.3 times a year to scan the whole sky. Unlike *Hipparcos*, which used an image dissector tube, FAME will use a CCD array with high quantum efficiency to determine transit times while simultaneously observing many stars. The CCDs will be used in a time-delayed integration (TDI) mode to synchronize the charge transfer with the rotation of the spacecraft.

An input catalog will be generated by the science team using data from USNO catalogs. The input catalog is required to "window" the pixel data. The accuracy needed is 0.1 arcseconds, which will be easily attained using USNO catalogs. The catalog will be loaded onboard the spacecraft and will be re-programmable after launch. Over the course

of the 2.5-year mission, each of the $m_v \geq 9$ program stars will be scanned about 950 times. The data from all the targets will be analyzed in order to derive their positions, proper motions, parallaxes, and colors.

The FAME baseline mission is 2.5 years of continuous observations, interrupted only by orbit, attitude, and rotation adjustments, as necessary. The observations will include astrometric observations with the majority of CCDs, bright star observations through neutral density filters, and photometric observations through four filters. The instrument will observe 40,000,000 stars in the magnitude range $5 < m_v < 15$ with mission positional accuracies between 50 and 500 μas and photometry with milli-magnitude accuracies. The parallaxes and proper motions will be of equivalent accuracy.

1.5 Spacecraft. The FAME spacecraft consists of a spacecraft bus and a single instrument subsystem. The primary requirements of the instrument are to measure the positions, proper motions, parallaxes, and photometry of stars as faint as 15th magnitude. The primary requirements of the S/C bus are to place the instrument in the proper orbit, provide a long term stable platform for the instrument, and collect and forward the science data to the ground network.

The instrument for the FAME mission is based on an evolution of that flown on the ESA *Hipparcos* mission. The FAME instrument takes two essential geometric characteristics from *Hipparcos*: i) two widely separated fields of view that are combined on a single focal plane, and ii) a scan pattern that involves both a nominal spin axis orthogonal to the look directions and precession of that spin axis around the Sun direction. The instrument improves on the *Hipparcos* mission by using solar pressure for precession, thus eliminating thruster firings, and using a large format, high sensitivity mosaic of CCDs.

To put the instrument in the proper orbit, the S/C bus was designed with a central thrust tube and structure to accommodate an apogee kick motor and a hydrazine propulsion system.

To provide a stable platform for the instrument, all actively moving components were eliminated. The S/C bus thermal design and operations modes are such that constant power and temperatures are maintained to eliminate structural expansion/contraction. Passive damping is employed to maintain a low level of jitter.

Additionally, the spacecraft bus collects, buffers, formats for downlink, and transmits the instrument data to the ground network. The vehicle attitude and state of health are continually monitored for nominal conditions.

1.6 Educational, Technology, and Public Outreach.

1.6.1 Education. FAME provides an exceptional opportunity for education and public outreach because many of the concepts related to the mission are easily understandable by non-scientists, including school-aged children. FAME instructional materials can be readily aligned with the National Science Education Standards (NSES) content standards.

We will partner with the Science Education Department (SED) of the Harvard-Smithsonian Center for Astrophysics (CfA) and the Carnegie Academy for Science Education (CASE) of the Carnegie Institute of Washington to develop and implement a comprehensive E/PO program.

The SED programs work on a national scale and link together educators and scientists to work on projects combining curriculum development, learning theory, teacher enhancement, and technology. The CASE program works on a local level and is designed to increase District of Columbia Public School (DCPS) teachers' knowledge of science and present new methods of bringing science to their students.

1.6.2 New Technologies. FAME will introduce new technologies in a conservative manner such that there are alternative approaches or back ups, if required. Solar radiation pressure will be used to provide smooth precession of the rotation axis, thus avoiding frequent thruster burns. To the extent that the solar radiation pressure is variable, or does not result in the desired precession, thruster burns will be used. The mission is planned such that this will not prevent either the accomplishment of the baseline mission or the extended mission.

FAME will use an array of 24 CCDs. While the use of such a large number of CCDs has not been previously accomplished in space, smaller arrays have been used in space on the HST, and a larger

array has been used on the ground for the Sloan Digital Sky Survey (SDSS). The USNO has had experience with both applications, including performing the engineering for the SDSS array and for a smaller array designed for astrometry and photometry at the USNO Flagstaff Station.

1.7 Public Outreach. The FAME public awareness/media relations program shall be coordinated by the USNO Public Affairs Office. The USNO Public Affairs Office will issue national press releases and will coordinate issuing local press releases by the principal collaborating institutions and corporation.

A FAME web site has been established (http://www.usno.navy.mil/fame) to disseminate information about the status of FAME and as a portal to access the FAME data products. The web site will be updated as required to provide the public with the latest information on FAME and its progress in answering fundamental astrophysical questions.

1.8 Management. FAME's management team contains the scientific, technological, and managerial expertise to execute this mission on cost and schedule.

1.8.1 FAME Team. The US Naval Observatory (USNO) has assembled a team with complete, in-depth experience in the necessary technologies of astrometry and spaceflight. This team comprises Lockheed Martin Missiles and Space Advanced Technology Center (LMMS ATC) for the instrumentation, the Naval Research Laboratory (NRL) for the spacecraft bus and systems integration, and the Smithsonian Astrophysical Observatory (SAO) for synthesis and verification of the scientific measurement system. USNO will provide the management and scientific leadership for the project and perform the data management, analysis and archiving. Our science team represents US and European academic and government institutions. The team has broad experience with ground based astrometric techniques and space flight programs and includes scientists with expertise in the use of astrometric data for various astronomical investigations. The engineering team is similarly experienced with precision ground and space-based optical systems.

FAME uses a Principal Investigator (PI) model for management.

❒ The PI, Dr. Kenneth Johnston, USNO's Scientific Director, is accountable to NASA/Goddard Space Flight Center (GSFC) for the FAME mission. This responsibility includes on-time and on-budget delivery of the instrument, spacecraft, ground data analysis system, and archival data products.

❒ The Project Manager (PM), Mr. Mark Johnson, NRL, is responsible to the PI for developing mission elements to a consistent set of requirements, supporting the Level 1 baseline agreed upon by the Science Team, and assuring the budget and schedule are met.

❒ A Senior Executive Board, comprised of senior executives, assures that mission institutional activities are aligned and resolves top-level issues that conventional project management mechanisms cannot successfully resolve.

❒ The Science Team defines and monitors scientific mission requirements. It is chaired by Dr. Kenneth Seidelmann, with Dr. Robert Reasenberg as deputy.

1.8.2 Management Approach. FAME stresses cost containment. Realistic requirements will be set to satisfy the baseline science investigation achievable within cost and schedule risk. Clear lines of accountability make a person, not an organization, responsible for each program element. The partnering institutions stress a "badgeless team" approach, and maintain a systems engineering focus throughout definition, development, and test activities. Frequent and rapid communication using e-mail and teleconferencing ensures coordination of all project elements.

Institutional and individual roles and responsibilities are clearly delineated. Each individual overseeing a project element reports to the PM. Designated System Engineering and Mission Assurance personnel conduct requirements analysis and verification, specialty engineering, and quality assurance activities. Design reviews and safety studies are concurrent with design and fabrication of the instrument, the spacecraft, and processing for launch.

1.8.3 Risk Management. The principal risks for FAME involve the CCD performance, solar radiation precession, continuous observations and data transmission, and possible spacecraft jitter. Each risk is being aggressively addressed to achieve re-

quired performance. In each case any compromise of performance would result in some loss of astrometric or photometric accuracy. With the excellent baseline accuracy, the possibly reduced accuracies would still deliver exciting scientific results.

Decisions involving descope options reside solely with the PI acting with the advice of the Science Team and approval of the NASA Midex program office. Descope options include a smaller aperture, a focal plane populated by fewer CCDs, and a reduction in accuracy to 80 µas for stars brighter than 10th magnitude.

1.8.4 Master Schedule. The master schedule establishes task interrelationships, time phasing of events and key activities, and critical path. The PI oversees the schedule and the PM executes it. The schedule includes three months of funded reserve.

1.9 Cost Estimate. $139,939,495 ($FY98)

This number includes the concept study costs of $350,000, $9.6M of reserves, and launch vehicle costs specified in the AO. The oral estimate of increased launch costs from Kennedy Space Flight Center of $1.71M is not included in this total.

1.10 DoD Interest. The proposed investigation will produce an archival catalog of positions and proper motions that will meet a documented requirement, that will not be met otherwise, of the U.S. Department of Defense in the next century. The catalog will achieve an absolute astrometric accuracy of better than 50 µas and proper motions of 50 µas per year for stars of 9th magnitude and brighter.

1.11 Changes Made During Concept Study. There were no changes in the proposed science or descoping of the science as a result of the concept study. A number of trade studies and concept designs were conducted during the concept study. These include:

- ❒ Optical design focal length, FOV, spin rate,
- ❒ Optical system manufacturability,
- ❒ Focal plane assembly design optimization,
- ❒ Input catalog vs. threshold readout,
- ❒ Science data compression and formatting studies,
- ❒ CCD studies and centroiding test,
- ❒ Photometric filter selection,
- ❒ Thermal control for optical systems,
- ❒ Solar radiation precession analysis,
- ❒ Orbit selection vs. communication rate,
- ❒ Ground station operation design,
- ❒ Spacecraft location with respect to ground station location,
- ❒ Project cost analysis, and
- ❒ Risk analysis.

Thus, the concept study did result in some changes in the implementation and methods of achieving the science. These are reflected in Sections 2 and 4.

The changes made to the instrument design have significantly reduced technical risk and consequently improved cost realism and schedule achievement. We have developed an improved design that will give a more accurate individual observation and is easier to manufacture and align. The new design has twice the focal length of the original, thus the field of view is one half the original and the point spread function covers about twice the number of pixels in the integration direction. Doubling the focal length of the optics then leads to doubling of the rotation and precession periods of the S/C. The basic angle has been increased to 81.5˚ to allow for a larger primary and to reduce the separation between the compound mirror and the primary. With this design the entire detector plane could be covered with CCDs, allowing for a more compact arrangement of the CCDs in the focal plane.

We have added two new science team members, Drs. Charles Beichman and Alan Boss. We have an identified, experienced project manager in Mr. Mark Johnson from NRL and an experienced instrument manager in Dr. Richard Vassar from LMMS ATC.

FACT SHEET

Full-Sky Astrometric Mapping Explorer

FAME

Dr. Kenneth J. Johnston, US Naval Observatory, Principal Investigator

Science Objectives. FAME will measure the positions, proper motions, parallaxes, and four-color magnitudes of 40 million stars brighter than 15th visual magnitude during the observational program. The positional accuracy will be the finest yet achieved. The positional, parallax, and proper motion accuracies will be better than 50 µas, 50 µas, and 50 µas/year, respectively for brighter stars.

❒ We will calibrate the absolute luminosities of "standard candles" that define the distance scale to galaxies. This supports the Origins, and Structure and Evolution of the Universe themes.

❒ We will calibrate the absolute luminosities of hundreds of solar-neighborhood stars for studies of stellar evolution. This supports the Origins, and Structure and Evolution of the Universe themes.

❒ We will detect large planets, planetary systems, brown dwarfs, and stars with non-linear proper motions that are not single star systems. This supports the Origins, and Solar System themes.

❒ We will study kinematic properties of stars and assess the abundance of dark matter in the galactic disk. This supports the Structure and Evolution of the Universe theme.

Mission Overview. The FAME spacecraft will be placed in a geosynchronous orbit, with a rotational axis 45˚ from the Sun, rotating with a 40-minute period. The rotational axis will precess around the Sun every 20 days. FAME will sweep the sky repeatedly, in a pattern similar to the *Hipparcos* project. The mission life is 2.5 years, with a potential extended mission life of 5 years.

Science Payload. The scientific instrument has a compound mirror looking in two directions separated by an angle of 81.5˚. The two fields of view are combined on a focal plane with 20 astrometric charge coupled devices (CCD) and four photometric CCDs. The CCD charge transfer rate is maintained at the spacecraft spin rate providing integration time for the observations. The pixels with stellar images are read out, time tagged, and transmitted to the ground station.

Key Spacecraft Characteristics. The spacecraft is a spin stabilized vehicle with a prescribed angular motion. A solar radiation shield generates the correct precession rate, and the sky is observed in a continuing spiral pattern. The spacecraft's thrusters reset attitude and spin rate, and perform stationkeeping maneuvers as necessary. The geosynchronous altitude enables the spacecraft and the ground station to communicate continuously.

Mission Operations. The Ground System includes a control center, a dedicated 11.3 m antenna, and a Science Data Processing Center. These facilities are linked via dedicated T1 lines and to NASA's communications system.

Anticipated Launch Vehicle. Delta II 7425.

Mission Management. The U.S. Naval Observatory (USNO) will manage the mission, science, and data processing. Lockheed Martin Missiles and Space (LMMS) Advanced Technology Center will build the instrument. The Naval Research Laboratory (NRL) will build and integrate the spacecraft and provide the ground station. The Smithsonian Astrophysical Observatory (SAO) will provide synthesis and verification of the scientific measurement system.

Schedule.

Phase A	January to June 1999
Phase B	October 1999 to June 2000
Phase C	July 2000 to March 2001
Phase D	April 2001 to June 2003
Launch	July 2003
Phase E	July 2003 to January 2007
Extended Mission	January 2006 to July 2009

Cost Estimate. $140M ($FY98)

FACT SHEET

Full-Sky Astrometric Mapping Explorer

FAME

QUICK FACTS

Spacecraft, Launcher, and Orbit	
Launcher (to GTO, 28.7 degree inclination)	Delta II 7425
Launch capability to GTO	1132 kg
Apogee Kick Motor	Star 30BP
Geosynchronous Earth Orbit (GEO)	35786 km, 88˚ West Longitude
Instrument Mass with Contingency	229 kg
Total Spacecraft mass and Contingency w/AKM	1031 kg
Mission Lifetime	2.5 years
Instrument	
Effective Focal Length	15 m
Number of Apertures	2
Aperture Size	0.60m x 0.25m, each
Primary Mirror Size	0.60m x 0.58m
Focal Plane Scale	0.01375 arc-sec/micron
Diffraction width at nominal wavelength (600nm)	0.413 arc-sec (2.0 pixels)
CCD Size	2048 x 4096 pixels
Pixel Size	15 microns
Pixel on Sky	0.206 arc-sec
Rotation Period	40 minutes
Precession Period	20 days
Rotation Rate	2618 CCD rows/sec; 0.382 msec per row
Time for star to traverse a CCD	1.56 sec
No. of amplifiers per CCD	2
Mean angle between Sun and spin axis	45 degrees
Drift of star due to precession	<5.7 pixels/CCD crossing
CCD Binning	1 x 20
CCD readout rate per amp after binning	134 kHz
Number of Astrometric CCDs, Total	20
Number of Astrometric CCDs with Neutral Density Filters	6
Number of Photometric CCDs	4
Photometric Bands	Sloan g', r', i', z'
ADC	3 at 12 bit (staggered)
No. of times a $m_v \geq 9$ star is observed (astrometric)	950
No. of times a $m_v \geq 8$ star is observed (photometric)	35
Instrument Performance	
Wavelength Range	400 to 900 nm
Magnitude Range (m_v)	5 - 15
Astrometric Accuracy (positions and parallaxes in μas; proper motions in μas/yr)	50 for $m_v < 9$, 500 for $m_v < 15$
Photometric Accuracy	1 millimagnitude

2. Science Investigation Description

2.1 Science Goals and Objectives.

2.1.1 Science Description.

2.1.1.1 Mission Goals. FAME will accurately measure, to 10% error or better, the absolute trigonometric parallaxes (i.e., the distances), positions, and proper motions, as well as the apparent magnitudes, of stars brighter than 9th visual magnitude that lie within 2.5 kpc of the Sun. Results of this survey will definitively address five key scientific objectives having far-reaching astrophysical and cosmological significance:

❒ Definitive calibration of the absolute luminosities of the "standard candles" (the galactic Cepheid variables and the RR Lyrae stars) that are fundamental in defining the distance scale to nearby galaxies and clusters of galaxies;

❒ Calibration of the absolute luminosities of solar-neighborhood stars, including Population I and II stars, thus enabling diverse studies of stellar evolution and other interesting science. In the case of Population II subdwarfs, this will allow the determination of the distances and ages of galactic and extragalactic globular clusters with unprecedented accuracy;

❒ Definitive determination of the frequency of solar-type stars orbited by brown dwarf companions in the mass range 10 to 80 Mjup and with orbital periods as long as about twice the duration of the mission. This will include an exploration of the transition region between giant planets and brown dwarfs, which appears to be in the range 10 to 30 Mjup;

❒ Proper motions and distances for individual stars in star forming regions for determinations of ages and kinematics; and

❒ A study of the kinematic properties of the survey of 4 x 10^7 stars within 2.5 kpc of the Sun, and in particular, assess the abundance and distribution of dark matter in the galactic disk with much greater sensitivity and completeness than previously possible.

The proposed investigation will also provide a catalog of star positions, proper motions, and colors that will meet spacecraft navigation, guidance, and attitude control needs of the United States Department of Defense (DoD) and NASA.

The volume of space included in the survey is large enough to contain significant numbers of all classes of stars found in the Milky Way Galaxy (see Figure 2-1). The survey will provide the scientific community with an invaluable and durable resource that will support a large number of other significant and fundamental, astrophysical investigations, beyond the few to be addressed within the immediate scope of the proposed investigation.

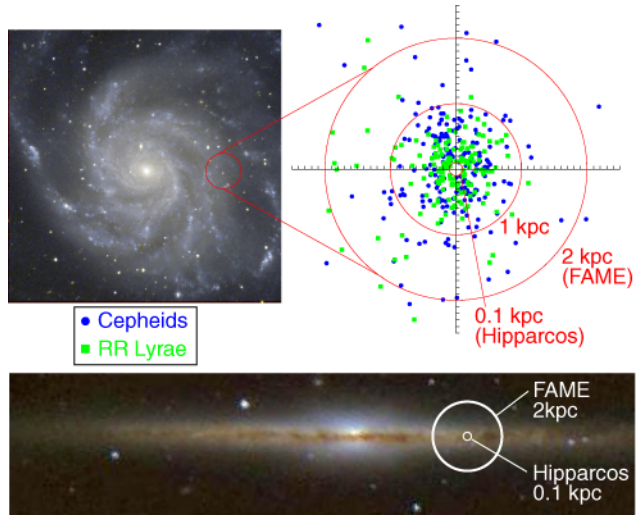

Figure 2-1. Hippacros and FAME Observation Coverage in the Milky Way

2.1.1.2 FAME Contributions to NASA Themes and Strategic Plan. FAME will provide the positions, proper motions, parallaxes, and photometry of stars as faint as 15th visual magnitude with accuracies of 50 microarcseconds (μas) at 9th visual magnitude and 500 μas at 15th visual magnitude. It will provide vital and fundamental astronomical data that address key questions of three NASA themes:

❒ For *Origins*, FAME will provide (a) the distance scale for the standard candles, (b) knowledge of stars in the solar neighborhood, and (c) detection of hundreds of substellar companions to solar-type stars, with a definitive exploration of the transition region between giant planets and brown dwarfs and the identification of prime targets for further research with SIM and TPF.

❒ For *Structure and Evolution of the Universe*, FAME will provide (a) knowledge of stellar properties of our galaxy, (b) distance scale for the standard candles, (c) accurate reference for Gravity Probe B, (d) distribution of matter in the disk of our galaxy, and (e) an understanding of how both

dark and luminous matter determine the geometry and fate of the universe.

❒ For *Solar System*, FAME will (a) detect or help identify other planetary systems, (b) help understand how stars and other planetary systems form together, and (c) provide a very accurate reference frame for solar system observations.

The results of the FAME project will contribute to the NASA Strategic Plan by helping to answer the fundamental questions of "how did the universe begin and what is its ultimate fate?" and "how do galaxies, stars, and planetary systems form and evolve?" FAME fits into the following strategic plan science goals: (1) understand how both dark and luminous matter determine the geometry and fate of the universe; (2) understand the dynamical and chemical evolution of galaxies and stars and the exchange of matter and energy among stars and the interstellar medium; and (3) understand how stars and planetary systems form together. FAME will help fulfill the following strategic plan scientific objectives: (1) measure the amount and distribution of dark and luminous matter in the ancient and modern universe and (2) observe and characterize the formation of stars, protoplanetary disks, and planetary systems, and detect Neptune-size planets around other stars. FAME will complement and support SIM and TPF in fulfilling the strategic program for 2000-2004 goals to: (1) understand how both dark and luminous matter determine the geometry and fate of the universe and (2) understand how stars and planetary systems form together.

In addition, for all themes and all astronomy, FAME will provide the most accurate reference frame ever obtained.

2.1.1.3 Relationship to Other Missions and Ground Observations. FAME is a small, low-cost survey instrument to determine the positions, proper motions, parallaxes, and photometry of 40,000,000 stars from 5th to 15th visual magnitude with 50 μas accuracy at 9th visual magnitude. It will greatly expand upon the observations of the successful *Hipparcos* satellite. It will help define positions for SIM grid stars, identify candidate stars for SIM and TPF, and complement the observational program of the pointed SIM instrument, which can observe about 10,000 stars at 4 μas. SIM science center and FAME personnel will be involved in data reduction procedures that have some commonality. There will be early identification of relevant techniques and reusable software. FAME will give an additional temporal baseline for SIM observations.

FAME will be launched at least 5 years before the proposed GAIA mission. In addition, DIVA, a proposed German mission with similar goals to FAME, but with reduced size, cost, and capabilities, is planned to be a second epoch *Hipparcos*. Neither DIVA nor GAIA is currently funded.

FAME vastly surpasses ground-based astrometric programs. The best wide-field accuracies from the ground are achieved by optical interferometers, which can reach 1 milliarcsecond (mas) accuracy for about 50 stars per night. There are no astrometric optical interferometers in the southern hemisphere. Narrow field accuracies of hundreds of μas can be achieved by interferometers and special instruments on very large telescopes for only a small number of stars. Ground-based survey instruments using charge coupled devices (CCDs) can at best achieve 25 mas relative accuracies. Thus, there is no current means of achieving a full-sky survey of millions of stars at microarcseconds accuracies other than by a space instrument.

2.1.2 Objectives and Significant Aspects.

2.1.2.1 Background. Our most fundamental knowledge about stars (their masses, absolute luminosities, distances, and motions in three-dimensional space) rests ultimately and inevitably upon direct measurements of the apparent places of stars relative to a frame of reference ideally defined as an inertial rest frame. From such measurements over time, we can derive the trigonometric parallaxes (the reciprocal of distance measured in parsecs), as well as the proper motions (the annual change in apparent place caused by a star's movement perpendicular to the line of sight). When the speed of motion along the line of sight is also known from spectroscopic measurement, the space velocity of a star is fully defined. In the case of binary stars, this information can yield the masses of the components. These parameters are basic to our knowledge of stellar structure and evolution, the structure and dynamics of the galaxy, and the scale of cosmological distances.

Prior to CCD development, trigonometric parallaxes could only be measured photographically

(with ground-based telescopes) to within an accuracy of about 10 mas, corresponding to an uncertainty of 10% at distances of 10 parsecs. The best modern ground-based measurements, using CCD detectors, achieve accuracies of about l mas, (Monet et al. 1992), pushing the limit of accurately known stellar distances out to about 100 parsecs. These are relative parallaxes as they are measured with respect to background stars. *Hipparcos* measured absolute parallaxes to l.5 mas, independent of background stars.

Measurement of relative parallax down to 20-30 μas can be achieved with ground-based optical interferometers over narrow fields. However, when these measurements are converted to absolute parallaxes, the final accuracy is not better than about 1 mas because distances and surface characteristics of the not-very-distant background reference stars are unknown. Very high accuracy (10-20 μas) measurements of absolute parallax are achieved in differential radio interferometry over small angles. Both these measurements are necessarily limited to relatively small numbers of objects.

Accuracies of 1-10 μas (yielding distances to 10% accuracy from 10 kpc to 100 kpc) would be achieved in the optical measurement of absolute parallax by proposed space missions such as SIM in the United States and GAIA in Europe. These missions will cost over $500 million each, and would logically follow FAME in the middle to later part of the next decade.

FAME, as a survey mission, complements the pointed mission, SIM. A survey mission will catalog a very large number of stars ($>10^7$), while a pointed mission of 5 year duration will study at most 10,000 objects very accurately. A survey mission such as FAME will yield knowledge on stars with excellent statistics, seeing as far in the galactic plane as extinction permits. The large number of stars will also allow corrections for reddening along the line of sight to program stars such as Cepheids and RR Lyrae via cluster main sequence fitting. The resulting data set will greatly expand our knowledge of the basic parameters of stars, the building blocks of galaxies and the universe. This knowledge will lead to fundamental advances in galactic astronomy and cosmology.

2.1.2.2 Specific Objectives. It is in this context that we see the opportunity for a MIDEX-class mission to make a definitive contribution to the solution of a number of very far-reaching problems in astrophysics and cosmology by providing accurate absolute parallaxes of 4×10^7 stars out to 2.5 kpc (25 times the current distance limit and over 15,000 times the volume of space for ground-based wide-field astrometry and *Hipparcos*), as shown in Figure 2-1. This volume is sufficient to contain significant numbers of all classes of stars, including Cepheid variables, RR Lyrae and δ Scuti stars, O, B and A stars, and Population II subdwarfs, as well as star-forming regions such as the Orion Nebula, as shown in Foldout 1, Figure C. Compelling reasons to undertake such a mission at this time can be cited in the context of several disciplines in astronomy and astrophysics. The key objectives we propose to address specifically and definitively in this mission are described in the following:

❒ *Fundamental Calibration of the Absolute Luminosities of RR Lyrae Stars and Galactic Cepheids, the "Standard Candles" for Measuring Cosmological Distances:* The period-luminosity relation for Cepheid variables, and the luminosity-metallicity relation for RR Lyrae stars, are fundamental to the determination of distances to the galaxies in nearby clusters and thus, ultimately, to the determination of the expansion age of the universe (c.f. Madore & Freedman 1991). Despite the fact that these stars have been used as distance indicators for a great many years, their calibration in absolute units is still very much an issue. See Foldout 1, Figure C for FAME's coverage.

▫ *Cepheids.* Although the slope of the period-luminosity relation for Cepheids is known from observations in the Magellanic Clouds, the zero-point of the relation must be derived from Galactic Cepheids. Such a zero-point derivation is currently uncertain by 10-20%, since the distances of Galactic Cepheids (with the exception of Polaris) are beyond reach of current capabilities for measuring trigonometric parallaxes. Instead, indirect methods are used (c.f. Evans 1995, 1992; Jacoby et al. 1992; Feast & Walker 1988). FAME will measure the absolute parallax of a significant sample of Cepheid variables directly, and thereby obviate all of the traditional, intermediate calibrations. Feast

and Walker (1988) give a list of cluster Cepheids, and Foldout 1, Table C shows the SNR that FAME will deliver. With FAME-determined parallaxes, field Cepheids can also be used as primary distance calibrators. This increases the number of calibrators, and provides many more of the long-period Cepheids that are of most value in measuring distances. Foldout 1, Table A lists field Cepheids within 1 kpc and the expected SNR that FAME will provide. This rich sample of Cepheids with accurate distance determinations will be the basis for a calibration of the period-luminosity relation, and for the investigation of possible three-parameter relationships.

▫ *RR Lyrae Stars and Globular Clusters.* The ages of globular clusters give a lower limit to the age of the universe and hence provide an important constraint on cosmology. At present, however, the ages are uncertain by about 30%, primarily because the distances are uncertain by 15% and age scales are the inverse square of the distance. Several methods support the "short" RR Lyrae distance scale (M_V (RR) ~0.75 at [Fe/H]= -1.6) including statistical parallaxes of RR Lyraes and kinematic distance to clusters. Main-sequence fitting of *Hipparcos* subdwarfs supports the "long" distance scale (M_V (RR) ~0.45). Baade-Wesselink and theoretical methods can support either scale depending on assumptions. (See Popowski & Gould 1998 for a comprehensive review.) The long scale is roughly in agreement with the standard Cepheid scale, which currently stands at the base of the extra-galactic distance ladder (van den Bergh 1995).

FAME will definitively measure M_V (RR) by obtaining accurate (<10% error) trigonometric parallaxes to 22 nearby RR Lyraes, Foldout 1, Table B. Assuming an intrinsic dispersion of 0.14 mag in absolute magnitude, this will determine M_V (RR) to 0.04 mag (2% in distance).

In addition, FAME will lay the basis for two direct checks on this fundamental measurement. First, FAME will measure proper motions of ~500 halo RR Lyraes within 3 kpc. If radial velocities are measured for these, they will yield a statistical parallax solution for M_V (RR) accurate to 0.06 mag. While not as robust as trigonometric parallax, statistical parallax is more nearly free of systematic errors than other currently used methods (Gould & Popowski 1998) and is currently limited primarily by the smallness of the sample.

Second, FAME will obtain trigonometric parallaxes with smaller than 5% errors to approximately 250 metal-poor subdwarfs. These can be matched to main sequence stars of similar metallicity in globular clusters to independently measure their distances. Reid (1997) and Gratton et al. (1997) have applied this method to a much smaller and less precisely measured sample of *Hipparcos* subdwarfs and obtained results that support the "long" distance scale. If the FAME determinations of globular cluster distances from subdwarf and RR Lyraes are in agreement, then the conflict over the RR Lyrae distance scale will be resolved. If not, it will demonstrate that there is something fundamental that we do not understand about either subdwarfs or RR Lyraes. In either case, the present rather murky state of the globular-cluster distance scale will be cast in a clearer light.

❒ *Determination of the Local Mass Densities:* A catalog of relative velocities of stars to 15th magnitude would, of course, have a vast number of uses over many years. We plan to use this catalog to investigate definitively the distribution of mass as functions of height above the galactic plane and of galactic radius. In particular, we will determine the local mass density and the local surface mass density of the galactic disk.

This relates directly, within the volume of space included in the survey, to the long-standing and apparently universal issue of missing mass or "dark matter" implied by dynamical studies of galaxies and galaxy clusters. The one place where there is a complete inventory of the luminous stars is in the immediate neighborhood of the Sun. From the mass-luminosity relation (determined from observations of binaries), we know the total mass in these stars and hence the total mass density of luminous material in the neighborhood of the Sun. What we do not know is the total mass density. If the total mass density were substantially greater than that of the luminous matter, this would demonstrate the existence of significant disk dark matter. Because disks are formed by dissipation, such dark matter would almost certainly be baryonic. Detection of baryonic dark matter would be a clue to the nature of the dark matter

overall and would greatly constrain our models of external galaxies.

Most previous measurements of the local mass density relied on stellar radial velocity and density measurements in a cone perpendicular to the galactic plane. The results have differed by up to a factor of 2 (Bahcall 1984; Kuijken & Gilmore 1989, 1991; Bahcall et al. 1992; Flynn & Fuchs 1994) most likely because of systematic errors. Crèzè et al. (1998) pioneered a radically different type of survey based on *Hipparcos* proper motions of ~3000 nearby stars and found that the local mass density is almost completely accounted for by visible material. However, because *Hipparcos* was complete only to $m_V < 8$, they were able to probe only within 100 pc of the Sun. Moreover, since they were mainly restricted to bright (and hence young) A and F stars, it is possible that their sample was not dynamically mixed.

FAME will provide an estimate of the local density of matter (which can be directly compared with the local density of stars and gas) that is essentially free of systematic error, by measuring proper motions within 30˚ of the galactic plane. A study based primarily on proper motions is to first order free of systematic errors because the quantity to be determined (i.e., the disk epicycle frequency $\omega = \sqrt{4\pi G\rho_0}$) and the quantity being measured (i.e., proper motions) have the same units (1/time).

FAME will measure accurate proper motions (< 4km s^{-1} kpc^{-1}) of ~10^5 early G stars with distance < 500 pc and $|b|<30°$. The resulting transverse velocity errors (<2 km s^{-1}) are small compared to the stellar motions, so this will allow a measurement of ρ_0 to a 3% error.

This G dwarf study will be the anchor point of the FAME attack on this problem, but many other classes of stars can also be used. For example, K giants can be used to probe at much greater distances from the plane (because accurate proper motions and parallaxes can be measured at much greater distances). In addition, F and A stars can give a very detailed look at the mass distribution close to the plane because of their low velocity dispersion. Even though these stars are not dynamically mixed, in the large volume probed by FAME the phase inhomogeneities of many unconnected subsamples will tend to cancel, permitting the use of these stars.

In brief, FAME will improve on the pioneering *Hipparcos* study of local dark matter by almost one order of magnitude in distance and two orders of magnitude in numbers of stars. It will also be less susceptible than the *Hipparcos* study to systematic errors caused by phase inhomogeneities.

❒ *Giant Planets and Brown Dwarfs:* Radial velocity surveys of several hundred nearby solar-type stars have discovered a few dozen unseen companions with minimum masses below the substellar limit, in the mass range 0.5 to 80 Mjup. Most of these have orbital periods shorter than 5 years. An analysis of the secondary mass distribution for low-mass companions suggests that the frequency of stellar companions (i.e. brown dwarfs) drops off rapidly near the substellar limit, while the frequency of giant planets rises toward lower masses (Mazeh et al. 1998). The transition region between giant planets and brown dwarfs appears to lie in the range 10 to 30 Mjup, although this result is still very preliminary and uncertain because of the small number of systems available for the analysis.

FAME will provide a definitive determination of the frequency of solar-type stars orbited by brown dwarf companions in the mass range 10 to 80 Mjup and with orbital periods up to about twice the duration of the mission. This will include an exploration of the transition region between giant planets and brown dwarfs. To be specific, FAME has the sensitivity to derive orbits for companions with masses down to 8 Mjup around 24,000 solar-type stars within 100 pc, 4 Mjup around 3,000 solar-type stars within 50 pc, and 2 Mjup for 375 of the nearest solar-type stars within 25 pc. These numbers are based on the results from simulations carried out for the GAIA mission (Casertano 1998), adapted to the FAME mission parameters of 50 μas astrometric accuracy.

In addition, FAME will be able to derive orbital inclinations for many of the stellar and substellar companions with spectroscopic orbits, thus eliminating the sin(i) ambiguity in the masses determined from the spectroscopic orbits. For the 51 Peg type systems with hot Jupiters in short-period orbits, FAME will be able to search for additional companions in much wider orbits. The discovery of additional companions would be especially significant, because it would provide evidence for

planetary systems (as opposed to just the largest planet) orbiting solar-type stars.

❒ *Star-Formation Regions:* The nearest star-formation regions in our galaxy lie at a distance of 150 pc (e.g., Taurus-Auriga), and the nearest rich star-formation region lies at 450 pc (Orion). The stars in these regions were mostly too faint to be observed by *Hipparcos*. The improved sensitivity of FAME will allow large numbers of pre-main-sequence stars in these regions to be surveyed. Perhaps the most important result will be to provide distances to individual stars, thus allowing them to be placed accurately on an HR diagram. This is critical for the determination of better ages of individual pre-main-sequence stars, which are presently uncertain by about a factor of 2 or more.

Furthermore, accurate proper motions provided by FAME, together with ground-based radial velocities, will allow studies of the kinematics of star-formation regions, which will clarify the processes by which newly-formed stars are distributed into the disk of the galaxy.

In particular, FAME will investigate the membership of many young (~10^6 yr old) galactic clusters. ROSAT observations have shown that many of these clusters are surrounded by large populations of X-ray sources in extended halos up to several degrees in size. These extended X-ray populations can outnumber cluster X-ray T Tauri stars by a factor of 10, so it is very important to determine whether they are also young stars that formed at the same time as the compact clusters. Knowing whether or not these stars are members of the clusters will fundamentally impact our knowledge of the mass function in galactic clusters, the lifetime for accretion disks and planet formation, and dynamical evolution of young clusters. FAME observations of these bright stars (m_V ~11 mag for M ~1 solar mass at the distance and age of the Chameleon cluster) will determine whether the compact clusters are at the same distances as their extended X-ray populations, and FAME tangential velocities will reveal whether the extended populations could have traveled from the cluster cores over the cluster lifetime (as deduced from its stellar evolutionary ages).

Finally, FAME will be able to determine the orbital inclinations of selected pre-main-sequence binaries with spectroscopic orbits, thus contributing to our knowledge of the masses for pre-main-sequence stars. There are at present no direct mass determinations for pre-main-sequence stars less massive than the Sun.

❒ *Other Science:* The data collected will serve as an invaluable resource in the public domain that will inevitably bring significant progress to other fields of astronomy. For example, stellar models require accurate observational constraints on stellar luminosities, masses, and radii as input. The accuracy required for luminosity is ~1%, for which parallaxes must be known to 0.5%. FAME will measure parallaxes to 0.5% accuracy for stars brighter than 12th magnitude in a sphere of 20-pc radius.

FAME will reach 1% relative precision for the luminosities of a sizable number of main sequence A and F stars. This group is especially interesting because it includes the transition from radiative to convective energy transport in the outer envelope, and many stars with peculiar characteristics such as Ap and pulsating δ Scuti stars. With metallicities obtained by spectroscopy, very precise determination of the luminosity will allow fundamental parameters to be derived, such as the depth of the convective zone and the efficiency of convective transport. For cooler stars, precise luminosities will place strong constraints on other fundamental parameters, such as the equation of state and molecular opacity. At a 5% level of accuracy, the distance horizon will include rarer but important types of stars, such as O stars, supergiants, T Tauri stars, Cepheids, and RR Lyrae stars.

Our knowledge of stellar masses derives mainly from the analysis of binaries. FAME will determine parallaxes and relative positions of the components of binaries, thus contributing significantly (in terms of accuracy and the number of binaries with known orbits) to the determination of stellar masses. Perhaps the most significant contribution will be for stars less massive that the Sun. In the range 0.08 to 0.5 solar masses there are only two double-lined eclipsing binaries that have been published, both of which yield masses to better than 1%. All the other masses for M dwarfs, about 2 dozen, rely on astrometric orbits and are less accurate by about an order of magnitude. FAME will provide orbital inclinations for nearby M dwarf binaries with double-lined spectroscopic orbits, thus

contributing significantly to the number of low-mass stars with accurate masses. When supplemented by ground-based metallicity determinations, this will allow critical tests of models of stellar structure and evolution for low-mass stars, which are now only poorly constrained. Through analysis of the positions of photocentric emission and the use of multiple colors, FAME will likewise determine the masses in unusual systems such as those containing white dwarfs and black holes.

FAME will provide accurate parallaxes for the determination of absolute dimensions in the cases where angular sizes are known. Only a few accurate radii are presently available for testing stellar models, the best of these coming from the analysis of eclipsing variables. Ground-based interferometry and lunar occultation techniques typically measure angular radii to accuracies in the range 0.2 to 2.0 mas. Future ground-based instruments, such as the Navy Prototype Optical Interferometer, has the capability to measure stellar diameters and shapes (and their time variation) to 0.1 mas.

Likewise, FAME will contribute fundamentally to calibrating the distances to open star clusters, determining the absolute color-magnitude diagrams of newly-formed star clusters, and identifying candidate stars for the possible detection of planets. FAME will measure the gravitational bending of starlight by Jupiter, Saturn, and the Sun, allowing the post-Newtonian deflection parameter to be determined with significantly better accuracy than currently available.

The photometric observations using the Sloan Digital Sky Survey filters (Foldout 1, Figure A) will detect many variable stars, provide significant improvements for HR diagrams, improve knowledge of stellar populations, and provide corrections for use in astrometric reductions.

2.1.3 Investigation Approach. The *Hipparcos* project was the first astrometric survey ever conducted without the limitation of Earth's atmosphere. It measured more than 100,000 stars to an accuracy of 1 mas and had a magnitude limit of m_V=12. Through advances in technology, FAME will dramatically improve upon the sensitivity and accuracy of *Hipparcos*. Measuring over 40 million stars to better than 50 μas ($m_V < 9$) and having a magnitude limit of m_V=15, FAME will expand the measurement space by over three orders of magnitude (see Figure 2-1).

Much like *Hipparcos*, FAME is based on the use of a telescope that looks at two FOVs separated by a fixed basic angle (81.5 deg). The spacecraft rotates at a rate of once every 40 minutes and measures stars along a precessing great circle, also called a spiral. Foldout 1, Figure D illustrates the rotational observing technique. The rotation axis of the spacecraft precesses around the Sun direction (18.3 times a year) to scan the whole sky. Foldout 1, Figure B illustrates the scanning pattern. Unlike *Hipparcos*'s image dissector tube, FAME will use a modern CCD array with high quantum efficiency to determine transit times while simultaneously observing many stars. The CCDs will be used in a time-delayed integration (TDI) mode to synchronize the readout with the rotation of the spacecraft. Modern instrumentation coupled with advances in the design and construction of low-cost, lightweight spacecraft will make FAME very cost effective with a high science return. The FAME mission concept, instrument, and spacecraft are discussed in Section 4.

An input catalog will be generated by the science team using data from the Washington Comprehensive Catalog Database and other USNO catalogs. The input catalog is required to "window" the pixel data. The accuracy needed is 0.5 arcseconds, which will be easily attained using USNO catalogs. The catalog will be loaded onboard the spacecraft and will be re-programmable after launch. Over the course of the 2.5-year mission, each of the program stars will be scanned in different directions over 950 times. The data from all the targets will be analyzed in order to derive their positions, proper motions, parallaxes, and colors. The data will be analyzed using procedures and algorithms somewhat similar to those used in the *Hipparcos* data reduction (see Section 2.3).

Table 4-56 lists the predicted astrometric accuracy for FAME based on the estimated error budget. The accuracy has three components: systematic errors, detector read noise, and photon noise. Systematic errors, arising from instrument limitations (such as pixel variations) will limit performance for bright stars (For the brightest stars, the limiting factor is fewer observations due to the use of neutral density filters). We have calculated a

systematic error floor of 10 μas. For faint stars, the dominant error source is $7e^-$ CCD read noise. Between these extremes, the dominant error source for stars between 10th and 14th visual magnitude will be photon noise. See Section 4.4.7 for a discussion of the error budget.

2.1.3.1 Baseline Mission. The FAME baseline mission is 2.5 years of continuous observations, interrupted by orbit, attitude, and rotation adjustments, as necessary. The observations will include astrometric observations in the regular CCDs, bright star observations through neutral density filters, and photometric observations through four filters. The instrument will observe 40,000,000 stars in the magnitude range $5 < m_V < 15$ with mission positional accuracies between 50 and 500 μas and photometry with milli-magnitude accuracies. The parallaxes and proper motions will be of equivalent accuracy.

2.1.3.2 Extended Mission. The baseline mission described in this proposal is for a 2.5 year lifetime. However, there are significant advantages to extending the mission. Increasing the length will increase the number of observations on the target stars and hence the resulting astrometric accuracy. Position and parallax measurements will improve as the square root of the mission length, whereas proper motion measurements would improve as the 1.5 power, thereby producing a catalog whose star positions are accurate for a longer period of time. The detections of low mass companions and giant planets are also significantly improved by the longer mission. Since this catalog is important for DOD applications, operations for an extended mission would be paid for by the Navy.

2.1.4 Minimum Science Mission. The FAME science team has determined that the science return from a mission, which is half as astrometrically accurate as that shown in Table 4-56, would remain compelling and exciting. With an accuracy of about 80 μas for all objects brighter than 9th magnitude, the number of Cepheids that could be measured to 10% would decrease from 20 to 5. Though a serious impact to this science objective, FAME will still provide the first direct absolute parallax measurements on these targets. For RR Lyrae stars, the impact is less; half of the objects in Foldout 1, Table B can still be measured to 10% error.

Although a minimum science version of FAME will still measure 40 million or more stars, decreasing the performance by a factor of two will reduce the volume of stars for a given accuracy by 8. Our survey would still exceed previous capability by a factor of 10, measuring stars accurately within a 1 kpc radius. Again, this would result in poorer statistics in the study of Population II subdwarfs and other classes of stars. However for all but the rarest stellar types, the sample will still contain an abundant numbers of stars.

2.1.4.1 Descopes. The definition of the minimum mission is given in Section 2.1.4. At any time during Phases A, B, and C, the PI can take descope action to resolve otherwise insoluble problems. However, if descopes are used to develop or replenish reserves, they have to be planned and executed on a carefully thought-out schedule. This section addresses descope options that could be executed to increase funding available for the future conduct of the project, or to terminate developments when funds for the task are depleted.

❒ *Astrometric Accuracy Descope.* The minimum science requirement for astrometric accuracy allows degradation of the following parameters:

- The number of observations per star reduced by a factor of 4, or
- A decrease in the electronic signal-to-noise factor of 4, or
- Change to a lower orbit and lack of transmission of all data, or
- Reduction in the number of CCDs.

These parameters are not independent. Degradations in all will convolve to determine the net degradation:

- Performance associated with the number of observations per star acquired depends only on system architecture (memory sizes, data rates, number of CCDs, etc.) and can be calculated.
- Signal-to-noise is determined primarily by the CCD behavior. Experience with devices similar to the FAME CCDs gives confidence that the noise specification can be met.

Descopes in astrometric accuracy to build cost reserves by reducing the number of CCDs must be made early in the project. Changes in the orbit and launch vehicle can be made later in the program and result in reduction of launch vehicle cost and loss of observational data.

2.2 Science Implementation.

2.2.1 Instrumentation.

2.2.1.1 General Overview. The FAME instrument payload is shown in Foldout 4. The optical ray trace is shown in Foldout 4. The optical system images two different fields-of-view (FOV) onto a large-format CCD mosaic camera. Instrument electronics control and read out this camera and digitize the pixel output. Field Programmable Gate Arrays (FPGAs) window the digitized CCD output around stars listed in the on-board input catalog. The instrument central processor combines the windowed data from the 6 FPGAs and timing information into a single data stream that is transferred to the S/C to be queued for telemetry to the USNO Control Center. The instrument electronics also control the temperatures of the optics and their support structures. Lockheed Martin Missiles and Space (LMMS) Advanced Technology Center (ATC) in Palo Alto is teamed with USNO, NRL, and SAO to design, construct, test, and support the instrument.

2.2.1.2 Instrument Architecture. The present instrument architecture is the result of a two-year study that started with an earlier version of FAME and the heritage of the successful ESA mission, *Hipparcos* (Perryman et al. 1989). The main results of the study are documented in a pair of SPIE papers (Reasenberg & Phillips 1998; Phillips & Reasenberg 1998). The optical design was revised during the concept study and the focal length doubled to improve the sampling and centroiding of the images. FAME takes from *Hipparcos* its two essential geometric characteristics, (1) two widely separated FOVs that are combined on a single detection plane, and (2) a scan pattern that involves both a nominal spin axis orthogonal to the look directions and precession of that spin axis around the Sun direction. The architectural study yielded seven principal results that lead us to the present FAME design. The "information rate" described below is the sum of the inverse variance of the position measurement of the observed targets per unit time. The seven results are:

a. A central obscuration of the telescope has minimal effect for this instrument;

b. The aspect ratio of the pupil (here the compound mirror) does not affect the information rate, which is proportional to the pupil area;

c. Smooth instrument rotation improves the absolute astrometric accuracy;

d. Solar radiation pressure (instead of thrusters) can precess the S/C smoothly;

e. For a focal plane of fixed size, and over accessible values of the effective focal length, F, the information rate varies slowly with F, and favors a small F;

f. There are many possible values for the basic angle. For instrument design, a basic angle of 81.5° for the baseline design is selected; and

g. The *Hipparcos*-type scanning pattern gives good (complete but not uniform) sky coverage, independent of the angle (ξ) between the Sun direction and the nominal rotation direction.

Based on results a and b, a square primary mirror is used to facilitate packaging. Results c and d lead to a preference of smooth rotation, and precession by the action of radiation pressure. The traditional *Hipparcos* rotation rate (2.5 hrs per rotation) requires a fine adjustment of the shape (sweep-back angle) of the solar shield to reduce the radiation pressure torque (by about 1.5 orders of magnitude) to an appropriate level. With the (four fold) faster rotation of FAME, the full torque of a nearly flat shield is used, and therefore a simple mechanism can be used. Result e includes the effects of two conflicting factors. Assuming a fixed number of pixels: i) the field of view is proportional to F^{-2} and ii) with a shorter focal length, there are fewer pixels over the diffraction pattern; note that the centroid is less precise (in the high-signal case). Combined with results c and d and additional considerations, result e directed us toward a fast rotation and short focal length. In the concept study it was decided to increase the number of pixels per image to improve the individual observation centroiding accuracy. This resulted in an increase in the focal length, a reduction in the rotation rate, a decrease in the field of view, and a reduction in the observations per star. There is no change in the program accuracy. Result f permits us to set the basic angle to 81.5° for packaging of the optical design, superior thermal control, and enhanced baffling. Result g confirms a well advertised aspect of the *Hipparcos* mission; astrometric results do not depend importantly on the nominal value of ξ or its change over the mission lifetime.

2.2.1.3 Instrument Description.

❒ *Optics:* The optical design was revised by Lockheed Martin to double the focal length and improve the manufacturability and the alignment of the optics as shown on Foldout 4. The compound mirror is composed of two 0.6 m x 0.25 m flats, which accept two FOVs separated by the 81.5˚ basic angle, and is the system aperture stop. These two fields are sent into the remainder of the optical train, a three mirror anastigmat, which images them coincidentally on its final focal plane. The primary mirror sends light to a secondary, which is near the center of the compound mirror. The light path passes through a hole in the fold flat mirror at the intermediate image plane while the reflective portion of this mirror folds the path near the exit pupil. The rays from the tertiary are then reflected from field flats, to fold the distance into the space available, and imaged on the detector array. The design has an effective focal length of 15 m, delivers diffraction-limited performance, and has very low distortion (0.02%) over the entire field imaged by the detector, Figure 4-22.

All mirror elements are made of ultra-low expansion (ULE) glass and are lightweight. For ease of manufacture, conic sections are specified for all three powered surfaces (primary, secondary, and tertiary). The compound mirror consists of two ULE flats, bonded together using sodium silicate, which is stronger than optical contacting. Stray light is minimized by the optical design and baffles made of 0.8 mm Al.

Raytheon Systems Company, Inc. has the capability and heritage (PRISM, MTI, SXI, AXAF, TRACE, ARES) to complete all of the above steps; design the mirror light weighting, fabricate the mirrors including zonal polishing, fabricate the window, design and fabricate the mounting flexures, coating, and metrology.

Fabrication, alignment, assembly, and test of the optical systems is discussed in detail in Section 4.6. The system undergoes thermal vacuum and vibration tests before final acceptance tests and delivery.

❒ *Structure:* The instrument mechanical design is based on a composite structure that provides mounting for the optical elements, baffles, CCD assembly, instrument electronic boxes, spacecraft star trackers, and optical cubes.

The composite structure is an optical bench with integral side, end, and top panels that holds the compound, primary, secondary, tertiary, fold flat mirrors and the CCD focal plane assembly. See Foldout 4 for a section view of the structure.

The CCD focal plane assembly, which mounts to the composite structure top panel, consists of an invar assembly housing, BK7 window, titanium flexures, and 24 EEV CCDs. The CCD focal plane assembly is thermally isolated from and mounted to the structure with titanium bipods.

Attached to the side panels of the structure are two aluminum baffles. The inside of the baffles are coated black for straylight reduction. The aperture covers are installed at the ends of the baffles to prevent particulate contamination. They are deployed by two spring loaded hinges.

The data processing and control electronics box and CCD control electronics box are mounted to the optical bench with titanium flexures and heat sunk using flexible copper ropes.

❒ *Thermal Design:* The instrument's high measurement precision is achieved without using laser metrology (along with its associated cost and risk) by combining stable, low CTE, materials and multi-layer thermal control. The first thermal control layer, a nearly flat solar shield, prevents sunlight from directly reaching the instrument. Further, the shield temperature distribution is invariant under S/C rotation around the spin axis. During the rotation cycle, the small heating of the instrument by reradiation from the back of the shield does not change. The optics and structural temperatures must be maintained at 20˚C, the temperature at which the materials have low and matched CTEs.

The instrument is isolated from the S/C by titanium flexures and a 10 layer MLI blanket on the underside of the optical bench. The instrument structure is surrounded by a 10 layer MLI blanket. This blanket reduces both variable heating by Earth and radiation to space, which would otherwise need to be replaced by electrical power. The instrument optics view space over approximately 0.3 m^2 through the star view ports and their associated baffles. The port baffles are insulated and thermally isolated from the optical bench to minimize both the heat loss and the variable heating effect of the Earth on the instrument.

The optical bench is heated to 20˚C with electric resistive heaters; this temperature corresponds to broad minima in the CTEs of the ULE optics and GrCyn structure. This heating requires 80 W of electrical power in steady-state operation to balance the radiative losses to space. Note that the heat generated by the instrument electronics and star trackers is dissipated into the optical bench.

Several events produce thermal disturbances at different times in FAME's rotation and orbit cycles. Solar input goes to zero during eclipses. Eclipses last a maximum of 70 min and occur once per orbit (day) during two seasons a year; each season lasts approximately 3.3 weeks. The heating of the instrument by the Earth also varies due to the 40 min rotation period and whether the Earth passes through the star view ports, which happens on ~15% of the rotations. Other disturbance sources, like the moon, are small compared to the Sun and Earth and are not considered.

We have modeled these effects on the temperatures and astrometric performance of the FAME instrument. This model included both solar and Earth thermal disturbances experienced by FAME. Results show that during most FAME observations, the thermal disturbances caused by varying solar and Earth heat loads on the FAME radiation shields cause only minuscule changes in the temperatures of the instrument. Figures 4-35 through 4-37 show the static temperatures and gradients of the optics for the nominal configuration of FAME in its orbit above the subsolar point. In this configuration, even with the instrument heaters running at fixed power, the instrument temperature at any point changes by no more than 3.5 mK (compound mirror) during a single 40 min rotation period. Such a temperature change yields a 1/3650 pixel shift of the stellar images on the detectors.

In the most extreme thermal configuration, the Earth passes directly through both fields and deposits approximately 18 W m^{-2} into the star view ports. This increased aperture heat load has almost no effect on the optics temperatures. The temperature fluctuation of the compound mirror over one 40 minute rotation is shown in Figure 4-38. This shows a maximum temperature fluctuation of 3.5 mK.

❒ *CCD Focal Plane Assembly:* FAME's excellent astrometric performance is due largely to its large-format, focal plane assembly. Twenty 4096 x 2048 pixel astrometric CCDs are located in a mosaic within 1.1 deg diameter in the FAME focal plane (Figure 2-2). Six astrometric CCDs are covered with neutral density filters (labeled ND A and ND B in Figure 2-2) that extend the system dynamic range. Four photometric CCDs are located in the central section of the array. These photometric CCDs are each covered with 2 of the different Sloan passband (g', r', i', and z') filters (each filter covers half of the columns) and some are combined with neutral density filters.

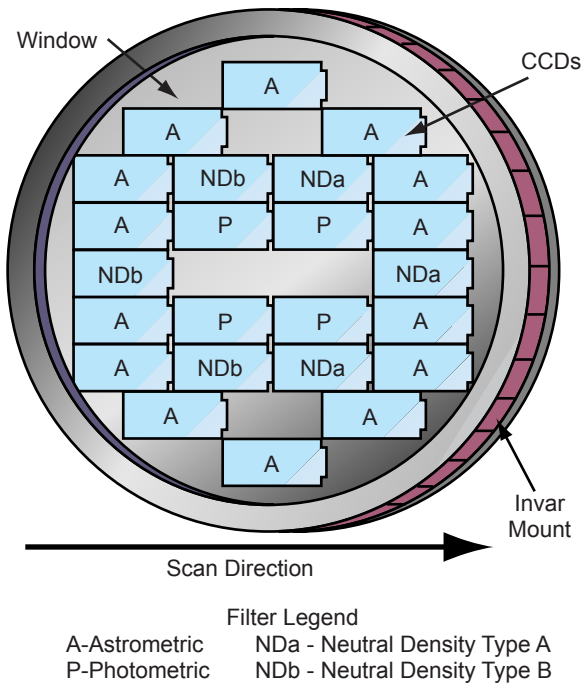

Figure 2-2. Layout of CCDs in Focal Plane

The CCD that is baselined for FAME is a slightly modified EEV CCD44-82. The EEV device only needs the addition of notch technology for greater radiation hardening and an array transfer gate for TDI readout. Other CCD manufacturers make devices that will meet our needs; however, they require more redesign.

Lockheed Martin Fairchild Systems (LMF), one of the back up suppliers, can also produce the FAME CCDs. These are minor modifications of existing LMF CCD 485 devices that have 4096 x 4096 square 15 micron pixels. Modifications consist of optimizing the response, reducing the size of the shift registers, geometry, and horizontal summing well sizes. The spaceflight heritage of these devices includes the *Cassini* camera. CCDs

using the same proprietary process are also used in the LMMS Autonomous Star Tracker. Another source of CCDs that meet the FAME specifications has been identified and contacted, MIT Lincoln Laboratories.

The FAME CCDs are three side buttable and have two output amplifiers. The science does not require that the chips be butted at the ends. Very high quantum efficiencies are further enabled by state-of-the-art anti-reflection coatings (Figure 2-3). Table 2-1 lists nominal device specifications.

The 4096 columns on each CCD are clocked in a TDI mode at 2.7 kHz to keep each star's charges under its image as it crosses each chip in 1.6 seconds. For most stars, groups of 20 pixels are binned in the cross-scan (orthogonal to TDI) direction, which is of secondary importance to the astrometric reductions. This binning reduces the ADC rate twenty-fold and reduces read noise by a factor of >4.3. Little information is lost since S/C precession (an essential aspect of the scanning law) smears the image over a maximum of 5 pixels (3 pixels RMS) in the cross-scan direction.

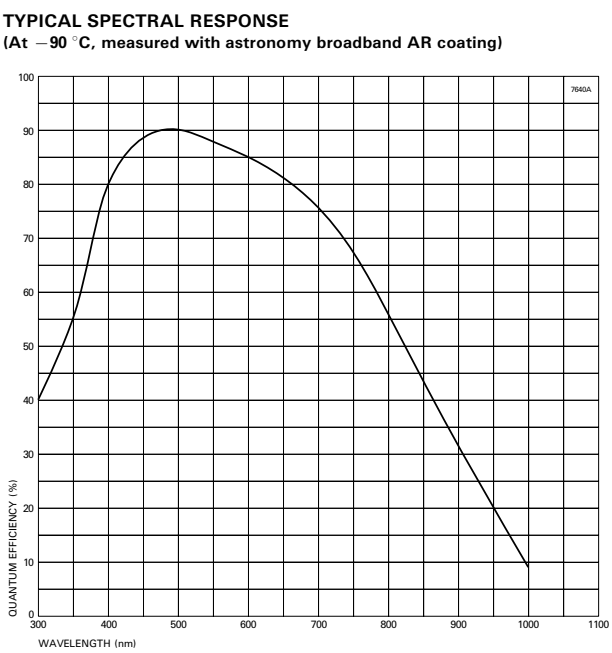

Figure 2-3. QE Curve of EEV 42-80 CCDs

The CCD focal plane assembly housing is fabricated of invar. CCDs are individually bonded to the invar housing. The astrometric bandwidth (400 to 900 nm), neutral density, and photometric filters are mounted in the focal plane assembly head just in front of the CCDs. The CCD focal plane assembly is thermally isolated from the optics structure with titanium bipods, and it is maintained at -70˚C. This is accomplished by routing an aluminum conductor to a 0.14 m^2 radiator located directly above it, which has a direct view of space. This low temperature ensures negligible dark current over the short integration periods and minimal degradation from radiation effects. Actively controlled resistive heaters are also included on the focal plane for extra regulation to ±63 mK. The window provides a contamination barrier on the front of the CCD focal plane assembly to prevent contaminants from condensing on the cold detectors. The focal plane can also be heated to remove contaminants.

Table 2-1. FAME CCD Specifications

Format	4096 x 2048 backside-illuminated
Pixel Size	15 x 15 microns
Process	3 phase buried channel, notch, multi-phase pinned (MPP)
Fill Factor	>99%
Output Amps.	2 on-chip
Amp. Sensitivity	3 microVolt / e-
Quantum Efficiency	≥90% at 600 nm
Noise	7e- RMS at 500,000 pixels s^{-1} read-out frequency
Dark Current	<25 pA at 20˚C
Charge Trans eff	0.999995
Pixel Full Well	>100,000 e- MPP
Serial Full Well	>450,000 e-

❒ *Instrument Electronics and Processor:* FAME electronics consist of three distinct subsystems. The first subsystem is the data processing and control electronics, which contains the primary spacecraft interfaces, power converters, control computer, and the 40,000,000 star catalog database. The second subsystem is the CCD control electronics, which contains the camera controllers, bias drivers, and master system clocks. The third subsystem is the camera, which includes the focal plane assembly (FPA), FPA thermal controls, and the analog processing electronics consisting of pre-amplifiers, double correlated sampling circuitry, and analog-to-digital converters. On-board data processing ensures that minor variations in spacecraft motion do not interrupt the continuous flow of science data.

On-board data processing can be split into 5 main tasks: spacecraft motion variation compensation, star window determination, data collection, commanding, and housekeeping.

The instrument's processor consists of mass storage, interface, and processing components. A catalog of 4 x 10^7 stellar positions and fluxes is stored before launch in a 3.2 Gbit solid-state recorder. Input star catalog positions will be updated from the ground on a monthly basis. Targets of opportunity can be added, and stored values can be updated during the mission. Table 2-2 lists the primary instrument processor functions.

Table 2-2. Instrument Processor Functions

- Basic instrument housekeeping.
- Establish the instrument attitude.
- Accept the incoming digitized data from each CCD channel and extract the pixels that contain desired stellar observations.
- Time stamp the extracted information and pass it to the S/C for storage and transmission to the ground.
- Monitor and adjust the CCD column clocking frequency to maintain time-delayed integration.

❒ *Instrument Processor Operations:* Initial operation is established as follows. Instrument attitude and rotation rate are coarsely established with star trackers, which are mounted on the optical bench. Fine attitude and rotation values are then determined from the sub-pixel centroids of bright stars (see Section 2.2.3.1). Once the attitude and rotation are determined to be within adequate bounds, the major mapping mode can begin.

In the major mapping mode, digital pixel data from ADCs are sent from the preamp to the processor via fiber optic links. These incoming data are windowed by the processor's FPGAs; they extract 10 (in-scan) x 1 (binned cross-scan) pixels centered at the position expected for each star from star catalog values. The FPGAs also time stamp the pixel data for future astrometric processing. Each FPGA processes eight channels of information, requiring a total of six FPGAs. The instrument computer's central processor is a fault-tolerant PowerPC flight system (General Dynamics Information Systems) that provides up to 480 MIPS performance and low power consumption. This processor receives the extracted pixel and time stamp information from the windowing FPGAs, which share its VME bus. The processor packages and sends these data to the S/C over an IEEE 1553 bus. The processor also monitors the timing of the TDI and adjusts the CCD vertical clock frequency so that the CCD readout is synchronized with the S/C rotation to better than 1/350 pixel over a single CCD. A single GDISC CPU computes the centroids of selected bright stars that traverse the leading and trailing rows of CCDs to determine the rotation rate necessary for TDI. The CCD clocking frequency can be updated as often as once per second, but we anticipate doing so far less often.

2.2.2 Mission.

2.2.2.1 Observing Strategy. After mapping begins, the S/C completes one revolution every 40 minutes, and it uses solar radiation pressure to smoothly precess the spin vector around the Sun line once in 20 days. The two FOVs sweep out overlapping "observing spirals." In this way, the entire sky is observed from different angles during the mission. As the S/C spins, star light enters both FOVs and crosses the CCD array in a TDI mode. As an image nears the CCD edge, surrounding pixel data are binned (cross-scan direction), time-stamped, and extracted. The on-board star catalog, knowledge of the attitude, and rotation rate are used in this process. Data are downlinked to the ground, where processing continues.

2.2.2.2 Solar Radiation Precession. An innovative aspect of this mission is the use of what is typically a disturbance torque to drive the required S/C precession. The Sun shield serves as a solar sail to produce a torque that precesses the spin axis around the Sun line. Because FAME's spin is dynamically stable and it is passively damped by liquid propellant, the motion is stable and can be sustained indefinitely.

While solar sails have provided mission-critical torque balance (Washwell 1996), this is the first proposed use of solar torque to drive S/C attitude changes. For an ideal Sun shade (i.e., a flat plus conic surface with uniform reflective properties), and given the vehicle mass properties and spin rate, the shield's sweep angle can be trimmed so that the solar torque yields the desired precession rate. Figure 2-4 shows the torque acting on the S/C due to solar radiation pressure on the shield, as well as the resulting S/C precession period. Typical shield angles are a few degrees. As illustrated, a torque null occurs at a specific shield angle; the S/C can be precessed in either direction. Calcula-

tions show that, even for small angles, there is adequate control authority without the need for high-precision adjustment (Figure 2-4). Gravity-gradient torques, spin-axis offset, and spin-axis misalignments also contribute to variations in spin and precession rates. Each of these disturbances can be rendered small through proper placement of solar cells, surface material selection, component placement, and spin balancing before launch. Preliminary analysis shows that spin axis misalignment must be ≤ 0.045 deg, and that the inertia ratio (I_t/I_s) must be between 0.9 and 0.67. Both requirements are met using proposed dimensions.

Solar Precession Models: Simulations show the solar torque precession approach to be robust to variations in mass properties and sunshade optical properties. Sun shade optical properties are consistent with a highly reflective surface on one pair and partial coverage by solar cells on the other pair. The effect of gravity is included, and the inertia ratio is 0.83. Figures 4-3 and 4-4 illustrate the smooth precession of the spin axis about the Sun line. In the simulations, more than 1,080 spin cycles were completed without a single thruster firing.

2.2.2.3 Orbit. Section 4.1.1 provides a discussion of the orbit selection and related information.

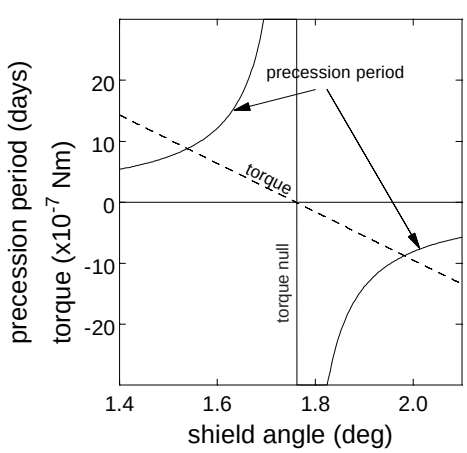

Precession torque (x10^{-7} Nm) and corresponding precession period (days) as a function of the Sun shade angle (degrees)

Figure 2-4. Precession Torque and Period

2.2.3 Data Analysis and Archiving. Although FAME will observe 400 times as many stars 20 times more precisely than the successful *Hipparcos*, the two missions share many similarities. Both use a precessing, spinning satellite with two FOVs to determine astrometric parameters for stars distributed globally. Both have one, high-quality, coordinate measure, and a much less precise orthogonal one. The FAME astrometric data reduction method benefits from *Hipparcos* heritage (Perryman et al. 1989; Kovalevsky et al. 1992; Lindegren et al. 1992; ESA 1997), but, from a data analysis perspective, FAME improves on *Hipparcos* in two ways.

❒ First, FAME spins and precesses smoothly, whereas *Hipparcos* used frequent ACS jet firings to precess the S/C. As a result, FAME has long periods of coherent rotation; there is no need to break the rotation into small segments and to estimate the rotation parameters of each segment.

❒ Second, FAME uses CCD detectors that have high quantum efficiency, are distributed over a wide FOV, and simultaneously integrate signals from many stars. The first two considerations increase the instrument's information rate, and the third increases the *rigidity*, or how well one can measure the separation of two widely spaced objects.

2.2.3.1 Astrometric Reduction Pipeline. The astrometric data reduction and analysis (Figure 2-5) has six major steps.

❒ *First-Look and Troubleshooting:* Data gathered from the FAME satellite must be checked immediately after downlink. Image detection, image quality, and satellite attitude are to be continuously monitored. Any anomalies in the data will trigger an anomaly recovery activity. One should note that the FAME control center and the first-look data analysis will both be located at the USNO, so there will be continuous contact between the groups.

❒ *Centroiding:* All pixel data surrounding each star will be telemetered to the ground, along with CCD column numbers and row-shift epochs. Events are archived both before and after calibration. Calibration entails correction for known CCD problems. These corrections include that for the optical distortion. The calibrated pixel data are then used to fit the parameters of a target model. This model includes the location in both the scan and cross-scan directions of the centroid, the amplitude of the signal, and at least one aspect of the shape of the diffraction-limited image. Initially, a simple stellar model will be used, but it has been demonstrated that using a priori PSFs will only

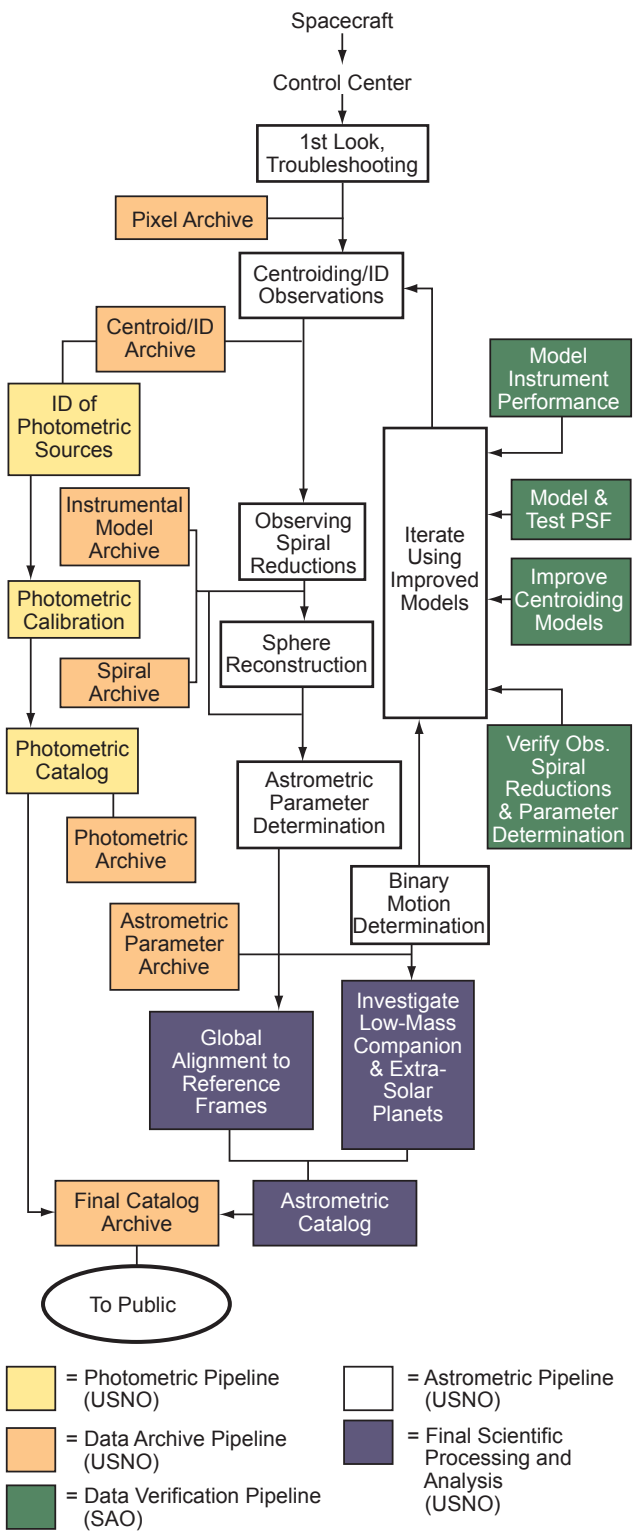

Figure 2-5. Data Analysis and Archival

yield low precision astrometry (Monet 1999). For high precision astrometry, an ensemble of observations must be used and the PSFs and positions are solved simultaneously. Using this technique, the PSF is composed of a weighted sum of monochromatic PSFs, whose shapes are determined from ray tracing or ground calibration prior to launch and whose weights are determined by the fit. The weighting in this algorithm is further constrained by the colors derived from the photometric filters and the knowledge of spectral energy distributions. An indication of image complexity, such as an extended object or multiple star system, is made at this time. Image centroids and amplitudes will be archived. Identification of stars using a duplicate of the on-board input catalog is made.

❒ *Observing-Spiral Reductions:* As FAME rotates and precesses, the CCDs map out a spiral band, or observing spiral, on the sky. The prime tasks in the observing-spiral reductions will be to characterize the satellite's motion and investigate changes in the optical path during an observing spiral. Once these are computed, using an (arbitrary) origin and the timing data, coordinates can be determined for all stars along the observing-spiral.

Knowledge of the S/C's time varying attitude is critical to the mission success. Of prime importance is the S/C's angular velocity, $\omega(t)$ since the separations (and therefore relative positions) of stars are determined by $\omega(t)$ and transit times of the centroided images (of lesser importance is the slowly varying axis of rotation, discussed below). A Fourier expansion of $\omega(t)$ will be integrated over the time for a star to cross both FOVs. The Fourier coefficients are obtained by equating such integration to the basic angle. Using these two view directions (separated by the basic angle) in this way imposes many closure conditions on $\omega(t)$ and avoids the scenario of $\omega(t)$ containing increasing errors stemming from a "random walk." This use of the two FOVs is taken directly from the *Hipparcos* design. In actuality, most stellar images will traverse two CCDs as they travel across the focal plane. The angular separation between two adjacent CCDs can be used analogously to the large basic angle. During this concept study, numerical simulations show that when these additional constraints are used, the attitude uncertainty contributes only 7% to the single observation error following 1.5 uninterrupted rotations (Germain 1999).

Simulations show that for FAME, low-frequency instabilities of the basic angle and CCDs do not degrade the final astrometric precision when their period is greater than the time it takes to rotate through one basic angle. Any such instabilities will, however, be monitored using the observations.

The time varying axis of rotation needs to be determined to precision of 100 μas to minimize projection effects due to unknown field rotation. Accuracies at this level must be determined from the stellar data from the CCD array. The combination of transit times, location of transit images in the cross-scan direction, and a priori positions of those stars will yield the plane of rotation, $xy(t)$, and axis of rotation, $z(t)$. The instrumental model developed for each spiral during this stage will be archived.

The abscissa, or one-dimensional angular separation in the along-scan direction, of each star can now be calculated and archived. In practice, this will probably be done with only a fraction of the stars at this time. (Note that information in the ordinate, or cross-scan direction, is an order of magnitude less precise and, in practice, will probably not be used at this step.) The abscissa is the integral of $\omega(t)$ between the transit time of an arbitrary origin, and the transit time of the star. The establishment of an origin for each observing-spiral will be achieved by using a subset of stars whose positions are known a priori to 20 mas from *Hipparcos* data. This origin, however, will contain a small rotation due to scatter in the *Hipparcos* data. This rotation will be removed in the sphere reconstruction stage.

❒ *Sphere Reconstruction:* Each observing-spiral defines an independent system. In the sphere reconstruction step, these systems are all brought together to form a single, global system, removing all arbitrary rotations. This will be achieved by solving for the origins as well as the astrometric parameters of a subset of stars using, primarily, the abscissae from the observing-spiral reductions spanning the entire program. Only point-like stars with constant space-velocities are used.

The observed abscissae from this subset are modeled as random variables that are expressed as a function of astrometric parameters (position, proper motion, and parallax), observing-spiral origins and orientations, and global parameters. The global parameters are a combination of periodic basic-angle variations, corrections due to gravitational light deflection, corrections due to aberration, and others. A system of unit-weight observation equations can be formed from the data. The astrometric parameters are adjusted for each star being used in this step, then eliminated from the equations as if the values for the observing-spiral origins and global parameters are correct. The entire process is iterated until corrections to the origins and global parameters converge. We are left with a description of the satellite behavior and a computation of a rigidly defined origin for each of the observing-spirals. New values for all abscissae and ordinates are recomputed and archived.

At first glance this step appears computationally problematic. However, one must note two things. First, only a subset of the stars will be used at this step. We envision fewer than 100,000 stars will be required, possibly much less depending on the stability of the optical system and satellite rotation dynamics. Second, the matrix containing the observables is sparse, and thus we will apply suitable hyper-structuring to reduce the original matrix to smaller submatrices that can be inverted individually and later recombined (de Vegt & Ebner 1974).

❒ *Astrometric Parameter Determination:* The new abscissae and ordinates computed in the sphere reconstruction stage are used to make a weighted, least-squares fit (one fit per object) to all stars to yield the five astrometric parameters. For each $m_V = 9$ star, there will typically be about 950 observations. Residuals will be examined for signs of nonlinear proper motion, which would indicate the presence of a nearby gravitating body. Under these circumstances, additional parameters will be determined. Investigations regarding previously undetected instrumental biases like systematics dependent on CCD, color, and magnitude will be performed.

❒ *Iterations and Global Alignment:* The data analysis is, by necessity, an iterative process since some instrumental characteristics can only be determined post-launch. For example, due to the large number of observations to be processed and the good observational diversity, numerous parameters can be estimated for each of the CCD chips.

These might include coefficients of a cyclic bias model, displacements from nominal positions, and even a polynomial describing astrometric shifts as a function of cross-scan position within each chip. As the instrument becomes better understood, we will be able to address these models in more detail.

We will re-centroid each observation using improved instrument models and the photometric reductions. Additionally, we will use updated positions from the initial reductions where a priori information is used, such as in determination of the axis of rotation. It is expected that less than three iterations will be required before convergence.

The global system defined by FAME will be internally more precise and rigid than any existing reference frame. However, due to the observing strategy, it can contain a global rotation. Therefore, the entire system will need to be aligned with another established frame. This will be done by rotating the FAME frame to coincide with the International Celestial Reference System (ICRS) within the errors of the ICRS. This is analogous to the recent alignment of *Hipparcos* to the axes of the ICRS.

2.2.3.2 Photometric Pipeline.

❒ *Overview:* There are 24 CCDs in the FAME array, and each has 2 amplifiers with three gain settings. Hence, there may be as many as 144 offsets and gains needed to calibrate the internal magnitudes, and each of these has the potential for being a function of time, spacecraft attitude, etc. During the mission, FAME will observe each m_v = 9 catalog star about 950 times with an astrometric CCD and about 35 times in each color with a photometric CCD. The problem is over-determined, and it is the goal of the photometric pipeline to provide initial estimators for each free parameter, and to monitor and/or model the behavior of each for the duration of the mission.

FAME has adopted the SDSS filter set (g', r', i', z'), and will tie its photometric reduction to the SDSS primary and secondary standards. This choice forces the photometric pipeline to deal with the following issues.

▫ The FAME filter set will be slightly different than the SDSS system arising from finite manufacturing tolerances. This is a normal part of photometry, and transformations from the internal to standard magnitude systems will be computed. For example, a similar procedure was needed to convert the B_T and V_T magnitudes produced by the Hipparcos/Tycho experiment into standard B and V magnitudes.

▫ There are only 4 primary SDSS photometric standards, and only a few hundred secondary standards. In addition, these are only available in the northern polar cap, the area covered by the SDSS survey. In one FAME rotation period (approximately 40 minutes), about 9 SDSS standards will be observed somewhere in the astrometric array, and about 0.5 standards will be observed in each color of the photometric array.

▫ The astrometric array is sensitive to the entire passband of 400-900nm, and photometric data will be important for the sensing and parameterization of stellar variability. The data from the photometric CCDs will provide important additional constraints of the parameterization of the PSF needed by the astrometric centroiding algorithm, and will be aid in the astrophysical interpretation of the stars.

❒ *Approach:* The first part of the photometric pipeline is the generation of approximate bias and flat field frames for each CCD, and the characterization of the bias and gain values for each of the 3 gain stages used for each of the 48 signal chains. In addition, PSFs will be collected and compared to those predicted by the optical design. This ground truth will be used as the first approximation to the on-orbit values.

The second part will be the generation of a set of intermediate standards. These should be bright enough to be dominated by photon statistics, and each member must be tested for variability and rejected if it is present. This set will provide enough stars to check for changes in the photometric calibration on each CCD at frequent intervals. These internal standards can be transformed to the standard SDSS system once enough standards have been observed.

The third part is a global relaxation solution solves for the mean flux of all constant stars and the ensemble of calibration parameters (and perhaps their time dependence) in a single solution. Given the large number of stars and the large number of observations of each, this solution should be very close to the internal, incremental solutions based on the ensemble of intermediate standards.

Once the internal magnitude system has been established, the transformation coefficients to the standard SDSS magnitude system can be computed. In the mean, the error introduced by this transformation should be negligible.

❒ *Expected Performance:* Table 2-3 shows the expected photometric uncertainty for a single FAME observation. The photometric accuracy of the z' filter is degraded from that of the g', r', and i' filters. For reference, the Hipparcos photometric performance is also listed. In this comparison, the FAME astrometric array delivers the Hipparcos level of performance for objects about 5.0 magnitudes fainter.

Table 2-3. Expected Photometric Uncertainty

Magnitude	Astrometric Filter	g',r',i' Filter	Hipparcos H_p
8	0.0010	0.0016	0.011
9	0.0016	0.0025	0.015
11	0.004	0.006	0.033
13	0.010	0.016	-
15	0.025	0.040	-

FAME will observe each $m_v = 9$ star about 950 times in an astrometric filter and about 35 times in each photometric filter. Assuming that the ensemble solution can remove the systematic errors, the precision of the mean magnitudes (in the internal FAME photometric system) is as shown in Table 2-4. Again, similar data from the *Hipparcos* mission are shown for comparison.

Table 2-4. Precision of the Mean Magnitudes

Magnitude	g',r',i' Filter	Hipparcos H_p
8	0.0002	0.0013
9	0.0003	0.0019
11	0.0007	0.0044
13	0.0020	-
15	0.005	-

❒ *Products:* The photometric pipeline is an integral part of the astrometric pipeline because the band-to-band flux ratios provide critical extra constraints on the parameterization of the PSF. Hence, the output of the photometric pipeline will be merged with the astrometric pipeline as part of the centroiding process. The photometric pipeline will be responsible for other data such as stellar variability and the time dependence of the CCD signal chains.

2.2.3.3 Data Validation Plan. Many different investigations can be undertaken to ensure that the data are being acquired and processed correctly. We will determine whether centroided pixel data fit the expected RMS error, whether the S/C rotational data fit a reasonable model of rotation, and the changes in the rotational parameters using different subsets of stars. We will analyze the data to ensure that subsets of observing-spirals give the same results, within the errors, as the complete ensemble of observing-spirals. We will ensure that the residuals are small and non-symmetric with respect to CCD phase, star color, and S/C rotation (with respect to the Sun and Earth). Although the FAME astrometric parameters will be the most accurate available, stars observed with both *Hipparcos* and the Navy Prototype Optical Interferometer (NPOI) will have position and proper motion accuracies of 1 mas and 100 µas/yr. Although of lower accuracy, these will provide an independent data set of a few thousand brighter stars with which to examine the computed astrometric parameters.

2.2.3.4 Data Archiving. Although the S/C produces on the order of 30 Tbits (4.0 T bytes) of data over the lifetime of the mission, currently available databases can manage this volume. There are seven stations in the analysis system at which the data or analysis results are archived and may be distributed to the public. These are: (1) the pixel data archive, to contain the raw data from the satellite; (2) the centroid archive, to include time, location, and amplitude of transit events; (3) the instrumental model archive, to comprise the description of the satellite motion and characteristics of the optical path; (4) the spiral archive, to include the positional data from each observation; (5) the photometric archive, to hold data from the photometric pipeline; (6) the astrometric parameter archive, to include positions, motions, and parallaxes following their determination; and (7) the final catalog archive, to encompass the results of the astrometric and photometric pipelines, project description, hardware details, and reduction methodologies.

The PI is responsible for all data deliveries. The specific products to be delivered to NASA's Astro-

nomical Data Center will be all of the seven archives. These data will be available within 1 year after the satellite data acquisition is completed, to allow for the data analysis and verification processes to be completed. It will be possible to make available an interim solution containing only positional and photometric data (not proper motions or parallaxes) about 18 months after launch. However, the experience of the *Hipparcos* consortia demonstrated that it is not advisable to provide less than full-accuracy astrometric data since many systematic effects can still be present, thus leading to spurious scientific conclusions.

2.2.4 Science Team. FAME's science team (Table 2-5) consists of scientists whose roles and expertise allow the mission to accomplish all of its objectives. The team will publish scientific findings from the mission and communicate these findings to the public. FAME's scientists are well-versed in precise astrometry (deVegt, Gatewood, Johnston, Seidelmann, Röser, and van Altena), instrumentation (Shao, York, Horner, and Phillips), analysis (Reasenberg, Jefferys, Urban, Beichman), astrophysics and distance scales (Huchra, Sandage), dark matter (Gould, Bahcall), photometry (Beichmann, Harris, van Buren), stellar evolution and luminosity (Greene, Monet), low mass companions and exoplanets (Boss, Latham, Horner, and Shapiro), and astronomical catalogs (Urban).

Table 2-5. FAME Science Team

Name	Role & Responsibility	Commitment (%) per Phase	
		B/C/D	E
Dr. Bahcall, Princeton	CoI, Application of astrometric results to astrophysics	1	10
Dr. Beichman, JPL	CoI, Photometry	1	5
Dr. Boss, Carnegie Institution	CoI, Low mass companions	1	10
Dr. deVegt, Hamburger Sternwarte	CoI, Astrometric accuracy and error sources	10	30
Dr. Gatewood, Univ. of Pittsburgh	CoI, Parallax investigations	1	10
Dr. Germain, USNO	CoI, Double stars, statistical modeling	60	60
Dr. Gould, Ohio State Univ	CoI, Galactic Structure, mass density and profile of the disk	1	25
Dr. Greene, NASA ARC	CoI, Young stars	15	20
Dr. Harris, USNO	CoI, Photometry	10	20
Dr. Horner, USNO	CoI, Low mass companions, stellar structure, stellar activity	100	100
Dr. Huchra, SAO	CoI, Cosmological distance scale	1	10
Dr. Jefferys, Univ. of Texas	CoI, Statistical modeling, data processing	20	25
Dr. Johnston, USNO	PI, Celestial reference frame/system, astrometry	50	50
Dr. Latham, SAO	CoI, Low-mass companions	1	10
Dr. Monet, USNO	CoI, Luminosity function of nearby stars	10	20
Dr. Murison, USNO	CoI, Solar radiation, solar system	25	25
Dr. Phillips, SAO	CoI, Companions, general relativity, distance scale	75	75
Dr. Reasenberg, SAO	CoI, Low-mass companions, general relativity, distance scale	75	75
Dr. Röser, ARI	CoI, DIVA collaboration	1	10
Dr. Sandage, Carnegie Observatory	CoI, Distance scales	1	10
Dr. Seidelmann, USNO	Science Team Chair, Astrometry, non-singular stars	75	75
Dr. Shao, JPL	CoI, SIM collaboration, instrumentation	1	5
Dr. Shapiro, SAO	CoI, Low-mass companions, general relativity, distance scale	1	5
Mr. Urban, USNO	CoI, Astrometry, catalogs, double stars, analysis	100	100
Dr. van Altena, Yale	CoI, Stellar dynamics, instrumentation	1	20
Dr. van Buren, IPAC	CoI, Photometric catalog, analysis	25	25
Dr. York, Univ. of Chicago	CoI, Three Dimensional Motions	1	10

FOLDOUT 1

Table A. Field Cepheid Variables Within 1 kpc

Star	Period		Distance	
	(day)	<V>	(kpc)	SNR
DT Cyg	2.50	5.78	0.45	44
FF Aql	4.47	5.38	0.45	44
BG Cru	3.34	5.47	0.45	44
RT Aur	3.72	5.42	0.50	40
YSgr	5.77	5.75	0.59	34
TVul	4.43	5.75	0.63	32
V1334 Cyg	3.33	5.85	0.67	30
AHVel	4.23	5.68	0.67	30
AX Cir	5.27	5.85	0.71	28
IR, Cep	2.11	8.60	0.71	28
R Tra	3.39	6.66	0.71	28
U Aql	7.03	6.47	0.77	26
MY Pup	5.70	5.65	0.77	26
U Vul	8.00	7.14	0.77	26
EW Sct	10.00	8.01	0.77	26
S Cru	4.69	6.57	0.83	24
S Sge	8.37	5.66	0.83	24
Y Oph	17.14	6.15	0.53	24
BFOph	4.06	7.28	0.91	22
VCen	5.49	6.82	0.91	22
T Cru	6.73	6.59	0.91	22
TU Cas	9.14	7.65	0.91	22
V636 Sco	6.79	6.66	0.91	22
BB Sgr	6.64	6.99	1.00	20
EU Tau	2.10	8.15	1.00	20
RV Sco	5.47	7.05	1.00	20

Table B. RR Lyrae Stars with Parallax Measurement Errors <10%

STAR	Period		Distance	
	(day)	<V>	(kpc)	SNR
RR Lyr	0.57	8.57	0.25	80
XZ Cet	0.45	9.20	0.38	52
CS Eri	0.31	9.20	0.48	42
MT Tel	0.32	9.28	0.48	42
AE Boo		10.00	0.56	26
UV Oct	0.54	9.79	0.56	27
V429 Ori	0.50	10.00	0.59	24
DH Peg	0.26	9.78	0.63	23
XZ Cyg	0.47	10.53	0.63	16
RR Cet	0.55	10.33	0.63	18
X Ari	0.65	10.48	0.63	16
RZ Cep	0.31	10.31	0.63	18
RX Eri	0.59	10.10	0.67	20
VX Sci		10.50	0.67	15
SU Dra	0.66	10.24	0.67	18
TU Uma	0.56	10.24	0.67	18
SW And	0.44	10.76	0.67	12
V Ind	0.48	10.48	0.71	14
TT Lyn	0.60	10.17	0.71	18
DX Del	0.47	10.26	0.71	16
SV Eri	0.71	10.23	0.71	16
DN Aqr	0.63	10.50	0.71	14

Table C. Cluster Cepheid Variables

Star	Period		Distance	
	(day)	<V>	(kpc)	SNR
SU Cas	1.95	5.97	0.26	76
SZ Tau	4.03	6.53	0.59	34
U Sgr	6.74	6.70	0.63	32
V Cen	5.49	6.82	0.67	30
S Nor	9.75	6.42	0.91	22
T Mon	27.02	6.13	1.67	12
HD144972	5.10	8.87	1.69	12
CPD-537400	11.22	8.37	1.69	12
RZ Vel	20.40	7.09	1.72	12
WZ Sgr	21.83	8.03	1.75	11
DL Cas	8.00	8.97	1.79	12
RS Pup	41.39	7.01	1.79	11
RU Sct	19.70	9.4	2.04	10
VY Car	18.93	7.46	2.08	10

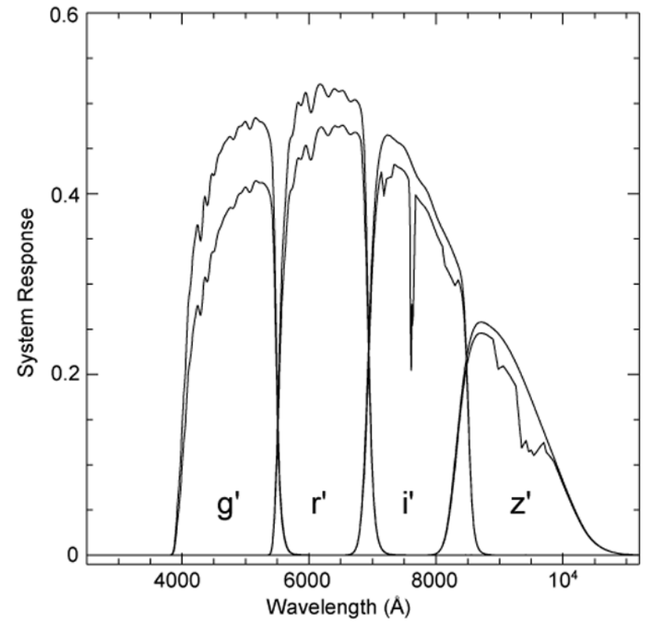

Figure A. Sloan Filter Set With & Without Atmosphere

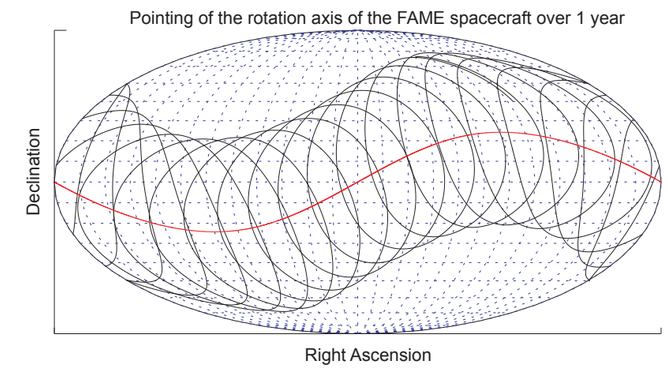

Figure B. FAME Scan Strategy

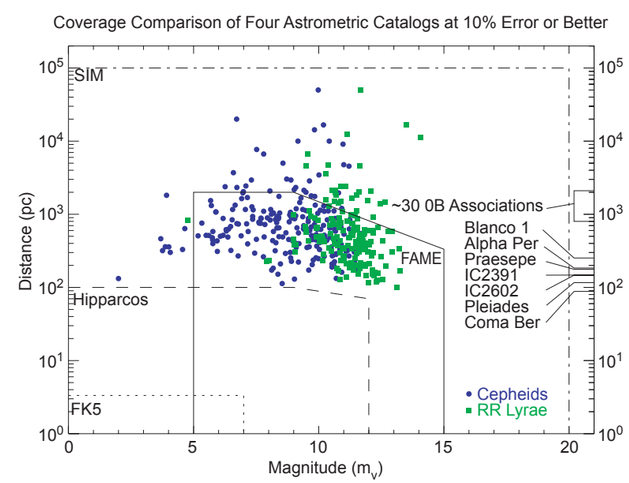

Figure C. Stellar Distances vs. Magnitude for Selected Science Targets

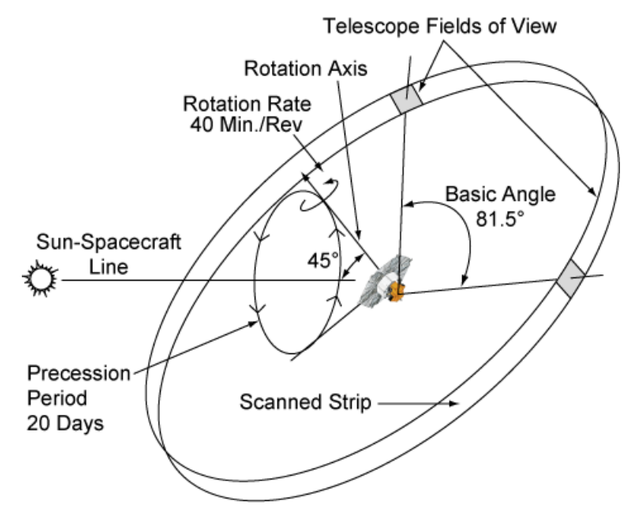

Figure D. FAME Observing Concept

3. Education, Outreach, Technology, and Small Disadvantaged Business Plan

3.1 Educational Program Activities. FAME provides an exceptional opportunity to educate non-scientists and students about the nature of the universe, the physical characteristics of stars, and the extreme distances within and between galaxies. Instructional materials will align with the National Science Education Standards (NSES) for professional development, teaching, and assessment as well as the content standards for Earth in the solar system, origin and evolution of the Earth system, and origin and evolution of the universe. FAME will be an effective tool to implement standards-based learning by illustrating concepts such as the size, age, and structure of astronomical systems and the universe itself. We will partner with the Science Education Department (SED) of the Harvard Smithsonian Center for Astrophysics (CfA) and the Carnegie Academy for Science Education (CASE) of the Carnegie Institute of Washington to develop and implement a comprehensive E/PO program. The SED develops innovative research-based physics and space science curricula, software, and science apparatus for elementary and secondary level classrooms. These programs effectively link educators and scientists in projects blending curriculum development, learning theory, teacher enhancement, and technology. The E/PO program leverages the wide range of existing or potential SED links to the formal and informal K-14 educational community. FAME-related concepts will enhance pre-college science education and science literacy. Planned FAME initiatives include the following:

❒ Partner with the Boston Museum of Science (MOS) to develop and disseminate a planetarium program focused on astrometric measurements for use in large planetaria with student groups and general audiences.

❒ Develop and disseminate a short planetarium program and classroom modules focused on astrometric measurements for use in small planetaria with students and general audiences.

❒ Partner with the NASA Educational Forum co-located at the CfA (Structure and Evolution of the Universe). Students will use the SED's MicroObservatory robotic telescopes to investigate the distance, size, and scale of galactic and extragalactic objects.

❒ Select K-12 classroom educators from a large pool (530+) of teachers and informal science educators affiliated with SED-directed programs and prepare them to lead FAME workshops and in-service programs at schools, conferences, professional development institutes, and public venues.

❒ Present FAME workshops and activities at major national, regional, and state science education or planetarium conventions. The E/PO program also exploits the wide range of opportunities among the diverse student and teacher population in the District of Columbia Public School (DCPS) system. Specifically, FAME project scientists will be actively involved in the CASE program, designed to increase DCPS teachers' knowledge of science and present new methods for conveying science to their students. The planned initiatives include:

❒ Develop FAME lesson plans and activities for elementary-aged students; integrate FAME data and analysis software into a web-based format for interactive use with the lesson plans.

❒ Feature the FAME lesson plans in the CASE First Light School, including visits to the project center at USNO.

❒ Feature lesson plans in the CASE Summer Institute, train DCPS science teachers, and field-test their implementation of materials in schools.

❒ Maintain an active relationship between FAME project scientists and the local community; interact with students using the FAME materials; and lead workshops at the Carnegie Institution.

3.1.1 Management Structure. Dr. Kenneth Johnston, the FAME Principal Investigator (PI), oversees the E/PO program. A full-time website manager, located at USNO, will develop and maintain the FAME E/PO web site and create data analysis software for use in conjunction with the CASE initiative. Dr. Robert Reasenberg, FAME Project Scientist, will oversee the SED portion of the E/PO program. He will meet regularly with the SED team leaders: Dr. Philip Sadler, Director of the SED, Assistant Professor of Education at the Harvard Graduate School of Education and F. W. Wright Lecturer on Celestial Navigation of Harvard University, and Dr. R. Bruce Ward, Project Director for AIRES and SEDNet and Adjunct Professor of Astronomy, Middlesex (MA) Community

Table 3-1. Summary of E/PO Activities

Activity/Product	Partners/Contacts	Target Populations	Evaluation	Estimated Cost FY98
▪ Design, Develop, Produce, and Disseminate a Planetarium Show on Distance, Size, and Scale.	Boston MOS Larry Schindler Ron Dantowitz	▪ Grades 6-14 Students and General Audiences ▪ 25 sites ▪ 10,000/site.	▪ Pilot in MOS ▪ Visitor Interviews ▪ Visitor-Response Forms	$335,000
▪ Produce and Disseminate a Small Planetarium Show and Companion Activity-Based Module on Distance, Size, and Scale.	SED Philip Sadler R. Bruce Ward.	▪ Grades 4-12 Students, Teachers, and General Audiences ▪ 25 sites ▪ 15,000/site.	▪ Pre- and Post-test ▪ Evaluation Feedback Forms	$110,000
▪ Partner with NASA Education Forum to Disseminate "From the Ground Up," a Unit for MicroObservatory Net.	SAO Roy Gould Mary Dussault.	▪ Grades 7-14 Students and Teachers ▪ 500+ sites ▪ 30-60 site	▪ Pre- and Post-test ▪ On-Line Evaluation	$30,000
▪ Select Master Teachers from Existing SED Networks and Prepare them to be FAME Workshop Presenters.	SED Philip Sadler R. Bruce Ward.	▪ Grade 3-14 Students, Teachers, and General Audiences ▪ 58 Teachers. 525+ Workshops ▪ 11,000 Teachers ▪ 350,000 Students	▪ Pre- and Post-test ▪ Evaluation Feedback Forms	$675,000
▪ Present FAME Workshops at Science and Planetarium Conventions.	SED Phil Sadler R. Bruce Ward.	▪ Grade 3-14 Teachers ▪ 30 Workshops ▪ 30-60 sites	▪ Evaluation Feedback Forms	$40,000
▪ Feature Interactive FAME Workshop in First Light School.	CASE C. James I. Ciefuentes	▪ Grade 3-8, 20 Workshops ▪ 30 students per Workshop.	▪ Pre- and Post-test.	Cost Included in Next Item
▪ Develop Web-based FAME Lesson Plans, Activity Booklet, and Poster. Provide In-Service Teacher Training of Their Use.	CASE C. James J. Edmunds	▪ Grade 3-8 Teachers. 3 Workshops ▪ 100 teachers per Workshop	▪ Pilot in First Light School ▪ Field-Test Implementation in Schools	$222,000
▪ Maintain Interactive Program with Washington, D.C. Area Schools	USNO ACPS CASE	▪ Grades 3-8 Students and Teachers	▪ Web Site Evaluation Forms	no cost
▪ Develop and Maintain a FAME E/PO Web Site. Develop Software for Student Analysis of FAME Data in Lesson Plans.	USNO	▪ Grade 3-14 Students and Teachers ▪ General Audiences	▪ On-Line Evaluation	$232,000
▪ Overall E/PO Project Evaluation	USNO E/PO Advisory Board		▪ Interviews and Evaluation Forms	$10,000

College. Dr. Irwin Shapiro, Timken University Professor at Harvard and Director of the CfA, will review all SED materials and programs for accuracy. The CASE portion will be managed by Charles C. James and Dr. Ines Ciefuentes, CASE co-directors.

3.1.2 Summary of E/PO Activity Summary. Table 3-1 summarizes the E/PO activities.

3.1.3 Strategies to Fulfill the E/PO Objectives.

a. *Developing and disseminating an astrometric planetarium program for large planetaria.* The SED will partner with the Boston MOS to develop a planetarium program based on astrometric measurements. This free program will be distributed to museum and science center planetaria elsewhere through national and international planetaria associations and the Association of Science-Technology Centers (ASTC). The SED will require planetaria using the free program to run it for at least 6 months, report attendance figures, and return completed visitor-response evaluation forms to the project evaluator. As structured, the program will introduce viewers to increasingly complex methods for measuring distances, size, and scale. The program will describe how missions such as FAME determine distances. The SED will begin developing the program in July 2002 so that the pilot version will be in the Boston MOS at launch.

b. *Developing, reproducing, and disseminating a short astrometric planetarium program module for use in small planetaria.* Working with the Boston MOS, the SED will scale down the technical requirements of the large planetarium program to create a version for use in small planetaria (in

both school and informal science education settings). The module will include astrometric-based activities related to the FAME mission, teacher notes for activities in a planetarium, and student activity guides. The planetarium program and printed materials will be disseminated free of charge through organizations serving the K-14 astronomy and space science community, including the ASP and NASA's Classroom of the Future (COF). Two age-appropriate versions will be developed. One will target grade 3-6 students and the other grade 7-12 students. The SED starts developing the activities and teacher notes for the module in July 2001 to ensure availability when the planetarium program is developed.

c. *Partnering with the NASA Educational Forum co-located at the CfA to facilitate students' use of the MicroObservatory for astrometric investigations*. The NASA Educational Forum is now taking advantage of an overlap between its mission and the SED's NSF-funded MicroObservatory, an on-line network of small telescopes that students can use from their classrooms. A program ("From the Ground Up") currently being developed for MicroObservatory users includes a module on size, distance, and scale, starting with simple parallax investigations and moving to more complex measurements and estimations. The vision is to provide students with examples of how working scientists use larger telescopes such as FAME. The SED will use its teacher networks to disseminate the program to secondary school and higher education faculty. Currently more than 500 teachers are enrolled and using the MicroObservatory telescope on-line from their classrooms.

d. *Preparing SED-affiliated K-14 classroom teachers and informal science educators to lead FAME space science workshops and in-service programs at schools, conferences, professional development institutes, and public venues:* The existing SED teacher networks include all 50 states and link numerous other networks in urban, rural, and suburban settings. These SED representatives work with students of all abilities and from all under-represented and underserved populations. The SED plans to incorporate FAME educational materials into their networks as follows:

❒ *SPICA, ARIES, and STAR:* More than 320 K-14 classroom teachers have attended institutes at the CfA and are trained as workshop presenters in astronomy and space science. To date, the teachers have conducted more than 14,500 workshops, reaching as many as 3,500,000 students. During a 4-year period, the SED builds toward a cohort of 58 master educators to serve as FAME space science education ambassadors and workshop leaders. These educators will come to the SED in July 2001 for a 2-week institute. At this time the SED will develop and produce a FAME workshop guide and a three-tier model for conducting workshops of varying lengths. During the 2001-2002 academic year, this first cohort of presenters will conduct pilot FAME workshops in schools, science centers, planetaria, and at conferences. The SED will reconvene the group several days in advance of the 2002 summer institute to assess and revise the workshop model and to provide additional training. These leaders serve as mentors at future summer institutes and as regional contacts for other workshop leaders attending subsequent institutes. In July 2002 to 2004, a 2-week FAME summer institute will be conducted at the SED. The SED anticipates that each participant will present at least eight workshops during a span of 2 years, reaching 200 teachers.

❒ *SEDNet:* Recently funded by the NSF, SEDNet is the department's nationwide leadership development network of Challenger Learning Centers (CLCs). Each year approximately 15,000 teachers and 400,000 students visit CLCs for simulated spaceflight missions. Mentor teams (comprising two CLC flight directors and one classroom teacher) attend 2-week summer institutes at the SED for two successive summers (beginning in 1999) and prepare to lead summer or school year workshops featuring SED's Project ARIES (astronomy-based physical science for grades 3-8) and NASA (Astronomy Village Two) curricula. The SED will work with the teams to integrate age-appropriate material about FAME into all their professional development and public outreach programs. The SED anticipates that each year SEDNet trainers will reach approximately 400-450 classroom teachers serving at least 9,000 students.

e. *Presentations by SED staff, CLC teams, and affiliated teachers at major national and regional science education conventions*. Annually, SED staff present at conventions sponsored by the

National Science Teachers Association (national and regional), the ASP, ASTC, the International Planetarium Society, regional planetarium conferences, and state science associations. Presenters will include FAME-related astrometric activities in these workshops and disseminate up-to-date print information about the mission.

f. *Using FAME to enhance the teaching and understanding of science in the Washington, DC area through web-based lesson plans and direct interaction with the community.* The 6-week CASE Summer Institute exposes teachers to new ways to teach math and science. Under a NSF Urban Initiative Grant, the CASE Summer Institute will educate five teachers from each of twenty District of Columbia Public Schools for each of the next five years (500 teachers). Developed by CASE staff in consultation with FAME scientists, FAME lesson plans illustrate topics such as relative distance scales, the galactic environment, and methods to detect planets. The lesson plans include web-based activities involving mission data and analysis software, a 14 to 16 page activity booklet, and a color poster. CASE creates two age-appropriate versions of the lesson plans, one for elementary schools (grades 3-5) and a second for middle schools (grades 6-8). CASE anticipates that the FAME lesson plans and activities will be featured in the program for three consecutive summers. CASE staff will field-test the effectiveness of the lesson plan implementation by visiting various DCPS classrooms during the school year. If necessary, teachers will be retrained in monthly seminars and workshops. The CASE program operates a Saturday school called First Light in which thirty students from the DCPS engage in weekly science activities, trips, and special summer programs. The school provides science enrichment for children who have little or no science education in their elementary classrooms. The FAME lesson plans will be evaluated in the First Light School. Visits to the USNO and interaction with FAME projects scientists will be included in the First Light School's FAME-themed workshops. CASE anticipates that lesson plans (minus the real mission data) will be available for use in the First Light School before launch so that students will be able to visit the mission control center during the height of activity surrounding the launch date. School districts surrounding Washington, D.C. have also expressed interest in receiving the lesson plans and participating in an interactive program with the FAME scientists. Teachers from these schools serve as CASE regional representatives and receive lesson plans to integrate into their curriculum. Alexandria, VA public schools (ACPS) pilot the FAME lesson plans. The ACPS has a very diverse student body, comprising students of many nationalities. Network Resource Teachers, educators with amateur astronomy backgrounds, assist the students and teachers in the interactive program with FAME scientists at USNO. They plan to use CU-See Me cameras via the Internet to converse with the FAME scientists throughout the mission and to present the results from their FAME activities for critiquing.

g. *Developing and maintaining a FAME E/PO web site.* A FAME educational web site at the USNO links the E/PO program components. A webmaster will develop the site and maintain it for 5 years. The web site conveys mission updates, announcements for related outreach activities (conference presentations, scheduled workshops, planetarium shows), program evaluation, and the web-based lesson-plan components. The webmaster assists the CASE staff to create the interactive portion of the lesson plans and plays a key role in developing the analysis software.

3.1.4 Evaluation Plan. The FAME PI will appoint an E/PO Advisory Board comprising local teachers, FAME scientists, and representatives from CASE and the SED who evaluate their program. Teachers and students using FAME educational materials will be polled to evaluate program effectiveness, independent of the CASE and the SED evaluation structure. Web-based forms are used. The E/PO Advisory Board will convene at least three times during the project, creating a dialog between each of the E/PO program components and the teachers using the material. The SED will select an outside evaluator to direct their program assessment and build on their protocols. New programs (planetarium) and materials (modules and activities) will be piloted, revised, and field-tested. In turn, they build on existing SED pre- and post-tests to develop brief, age-appropriate measures used in conjunction with the small planetarium modules and the workshops. The SED proposes to

use the interactive system at some large planetaria to obtain viewer responses to several summary questions at the end of the show. CASE plans to test the effectiveness of the lesson plans in their First Light schools before the in-service teacher training at their Summer Institute. CASE also plans to field-test the implementation of the lesson plans in the DCPS.

3.2 Public Awareness.

3.2.1 Media Relations. The USNO Public Affairs Office (PAO) coordinates FAME and related USNO public awareness/media relations. They issue national press releases and coordinate issuing press releases in the localities of the principal collaborating institutions, corporation, and science team members. The local press releases highlight the participation of the local institution. Table 3-2 lists the public affairs officers who develop and issue the press releases. Press releases are published on the FAME web site and the public affairs web sites of the participating institutions, and are distributed to the media and public via e-mail distribution systems and the postal service. Table 3-3 provides a partial list of press release distribution services. Press conferences are held for major program events, including launch. NASA officials (MIDEX PM, the Origins and SEU Theme Directors, Chief Scientist, and the Administrator) are invited to participate in press conferences.

Table 3-2. FAME PAO Officers

Org	Name	email/phone
USNO	Geoff Chester	grc@usno.navy.mil (202) 762-1438
NRL	Maria Lloyd	lloyd@ccf.nrl.navy.mil (202) 767-2541
SAO	Jim Cornell	pubaffairs@cfa.harvard.edu (617) 495-7462
LMMS	Buddy Nelson	(510) 797-0349 buddy1@home.com

Table 3-3. Press Distribution Services

Org	Name	email/phone
NASA Science News (NASA MSFC)	Linda Porter	linda.porter@msfc.nasa.gov (256) 544-7588
Space Science News (NASA HQ)	Craig Tupper	dtupper@hq.nasa.gov
NASA GSFC's Office of Public Affairs	William Steigerwald	(301) 286-5017
AAS	Steve Maran	hrsmaran@stars.gsfc.nasa.gov (301) 286-5154

3.2.2 Public Outreach. The FAME website (http://www.usno.navy.mil/fame) disseminates information about the status of FAME and serve as a portal to access the FAME data products. This web site is updated and maintained to inform the public about the progress of FAME in answering fundamental astrophysical questions.

❒ USNO conducts regularly scheduled public tours highlighting the relevance of positional astronomy and the Observatory's historical role in providing accurate astrometric positions during the past 170 years. FAME's SOC, located at USNO and FAME-related materials will be featured on the public tours.

❒ LMMS ATC maintains an ongoing commitment to educational outreach that involves schools, museums, articles in major magazines and popular science journals, local and national radio and TV programs, and the Internet. More than 250,000 posters and 300 different videos were distributed free to schools, universities and the public. LMMS ATC continues to support E/PO through its student work experience program; summer undergraduate hire program; industry initiatives for science and math education; California partnership academies; and mathematics, engineering, and science achievement program.

3.3 SB/SDB Subcontracting Plan. The FAME development team is committed to exceeding NASA's goal of 8% for SB/SDB subcontracting. During Phase B, we will work with NRL and USNO's Business Office to identify and maintain additional contracting options to meet these goals.

❒ USNO employs an aggressive program using SB/SDB in subcontracting and procurement actions. More than 25% of USNO contracts in FY97 were awarded to SB/SDB and these included women-owned businesses, historically black colleges and universities, and minority institutions. Because a vital SB/SDB program is a primary NASA goal for the investigation, a designated USNO Business Manager administers the SB/SDB program, and the PI approves it. Both are jointly responsible to assess and supervise the acquisition program and to establish SB/SDB subcontracting goals that satisfy NASA guidelines. Detailed records are maintained concerning SB/SDB subcontracting and these are available for NASA review (Table 3-4).

Table 3-4. SB/SDB Subcontracting Records

- Documentation of USNO and key subcontractor SB/SDB outreach activities, including participation in SB/SDB programs, and source search activity.
- Documentation of industrial contracts and their subcontracts for awards in excess of $100,000, indicating whether or not SB/SDB concerns were solicited and the reason for the award not being made to a SB/SDB.
- Documentation of acquisitions and demonstration of compliance with SB/SDB procedures and performance.
- Documentation of workshops, guidance, and training given acquisition personnel regarding SB/SDB use.

❒ NRL, our major governmental participant, sets goals for awarding contracts to women-owned businesses, SB/SDBs, and historically black colleges and universities. Table 3-5 compares NRL's FY97 goals and achievements. Although some of these categories overlap, the results clearly exceed NASA's 8% target goal.

Table 3-5. NRL's SB/SDB Goals

% of Contracts Awarded	Goal (%)	Achieved (%)
Women-owned business	3.4	5.3
SB/SDB (minority-owned)	7.5	7.9
Historically Black Colleges, Universities, and Institutions	5.0	4.2

❒ LMMS ATC, our major industry participant, has an outstanding record meeting SB/SDB goals. For example, LMMS won the 1996 Defense Logistics Agency and Small Business Administration "Outstanding Program Award." In 1997, LMMS awarded 15% of its subcontracts under NASA prime contracts to SDBs. LMMS was recently named "Corporation of the Year" by the Industry Council for Small Business Development.

3.4 New Technology. FAME uses older technologies in new ways and introduces new technologies into the space mission arena.

❒ *Solar Torque:* Our innovative use of solar radiation pressure provides smooth precession of the rotation axis. This avoids frequent thruster burns that degrade mission accuracy by enlarging and complicating the model used to analyze the data. While this method does not eliminate the need for occasional thruster burns to reinitialize the S/C's attitude and rotation, it does minimize the burn frequency. If solar radiation pressure varies or fails to provide the desired precession, thruster burns can be made more frequently. This "fallback" approach interrupts the total data acquisition cycle and reduces the extended mission duration (due to consumable sizing), but it still allows the baseline 2 1/2 year mission to be accomplished.

❒ *Astrometry Using CCD Focal Plane Arrays:* FAME uses an array of 24 CCDs for mission astrometry and photometry. This is a much larger array than previous flown. HST used small space-qualified arrays and the SDSS used larger ground-based arrays. USNO has substantial experience with both applications, including engineering for the SDSS array and for a smaller array designed for astrometry and photometry at USNO's Flagstaff Station.

FAME is pushing the levels of astrometric accuracy achievable with CCDs and with the spaceflight application of time delay integration (TDI). Ongoing USNO and LMMS ATC laboratory tests will verify that the combination of point spread functions, CCD architecture, integration time, and readout electronics provide the required precision for this mission. These same laboratory test results will refine the mission error budget and establish that the total system error budget will be achievable with the promised accuracy. Additionally, the current error budget has margin providing additional confidence of achieving the promised accuracy.

For the first time, FAME will perform astrometry at the microarcsecond level of accuracy, requiring development of refined theories and algorithms. These same developments are required for the SIM project. FAME serves as a "pathfinder" to test new methods and identify required improvements.

4. Technical Approach

4.1 Flow Down of Science Requirements. The primary science requirements of the FAME mission are listed in Table 4-1. To achieve these requirements, the FAME team will build, launch, and operate an astrometric survey instrument that incorporates the basic measurements strategy of the successful *Hipparcos* mission. However, the FAME instrument employs a high-sensitivity CCD focal plane array to make measurements on stars brighter than 15th magnitude, uses proven but state-of-the-art fabrication techniques and thermal control to measure star position to <50 μas for $m_v \leq 9$, and employs on-board computing and bulk memory to perform these measurements on a catalog of 40,000,000 stars. The FAME S/C uses solar radiation pressure to produce the precession of the spin axis, which is required to continuously map the sky. This innovative use of solar pressure allows long periods of data acquisition, uninterrupted by discrete attitude maneuvers. The geosynchronous FAME orbit provides continuous data downlink using a single ground station and minimizes disturbances caused by gravity gradient, magnetic field, and eclipses. FAME measurements that satisfy the science requirements and the requirements for the instrument, spacecraft (S/C), and orbit to support these measurements are summarized in Table 4-1. The following sections discuss the mission design, S/C, and instrument.

4.1.1 Mission Design. The FAME mission was developed to satisfy the science and system design parameters. Previous work identified a simple, yet powerful, mission concept. As with *Hipparcos*, only one passive observation mode is required to collect data. For FAME, under normal observing, no active attitude compensation in required. Additional features include the following:

❒ The S/C collects power from fixed Solar Arrays (S/A), which also serve as a thermal shield for the science instrument and provide a means to harness solar pressure for spin axis precession. Batteries supply power during eclipses.

❒ Redundancy in selected subsystems, including solar precession, minimizes overall mission risk.

❒ The S/C is positioned at GEO to minimize the effects of gravitational and magnetic torques and to maintain a continuous data downlink capability.

Table 4-1. Science Requirements Flow Down

Science Requirements	FAME Measurements	Technical Requirements	
		Instrument	S/C
Calibration of Absolute Luminosities	Absolute parallaxes to 50 μas (wide angle astrometry); photometry at $m_v \leq 10$	▪ Collecting area 0.6 x 0.25 m ▪ Two fields of view separated by 81.5° ▪ CCD QE (0.4 to 0.9 μm) average of 65% ▪ 0".206/pixel for 15μm pixel ▪ ~1000 observations of 1 mas accuracy needed to achieve 50 μas accuracy	Rotation period 40 min. with a 20 day precession period. Rotation rate variations less than 1 mas/s
Local Mass Densities	Proper motions to 500 μas @ m_v = 15		
Survey for Giant Planets & Brown Dwarfs	Accurate positions and parallaxes to 50 μas; proper motions (non-linear), 50 μas/yr over 2.5 years		
Survey Star Formation Regions within 1 KPC of the Sun	Parallaxes; proper motions; photometry to $m_v \leq 15$ mag with accuracies listed in Table 4-56		
Catalog of 40 x 10^6 Stars	Observations over max time period with accuracies listed in Table 4-56		
Photometry of 40 x 10^6 Stars	Multiple wavelengths; periodic observations; photometric calibration to 1 millimagnitude. Filters; S/N at all mag.; CCD flat fielding monitor; CCD degradation	▪ Collecting area 0.6 x 0.25 m ▪ Sloan filters ▪ Accuracy of single measurement (0.001 to 0.04) ▪ Calibration via standards	Rotational period 40 min. with 20 day precession period. Rotational period variations 40 mas/s

The launch vehicle (L/V) places the FAME S/C into a Geosynchronous Transfer Orbit (GTO) with apogee 300 km above GEO altitude. The S/C uses its Apogee Kick Motor (AKM) to circularize the orbit, then disposes of the spent AKM casing at the super-synchronous disposal altitude. On-board propulsion trims the orbit to the desired GEO altitude for the science operations phase and moves the S/C back to the super-synchronous disposal orbit at the end of the mission. In addition to the primary command, control, and communications site at Blossom Point (BP) MD, the DSN sites at Madrid, Goldstone, and Canberra are baselined for the 2.5 days of GTO operations. After circularization, BP is the only required downlink site.

4.1.2 Mission Phases. Table 4-2 and Foldout 2, Figure A define FAME's mission phases. Table 4-3 details the mission's sequence of events and timeline. Foldout 2, Figure C shows the orbit geometry.

4.1.2.1 Nominal Launch Window. The Design Reference Mission (DRM) indicates a baselined launch date of 7/21/2003. The time of day and

Table 4-2. Mission Phases

Phase	Description
Launch	From booster lift-off to S/C separation from Third Stage (~1600 seconds).
Geosynchronous Transfer Orbit	S/C Separation to AKM firing (<2.5 days).
Supersynchronous Orbit	AKM firing to final orbit slot and operational attitude (8 Days).
Science Operation	EE&C and instrument commissioning to the end of Operational Life (2.5 years for Baseline NASA mission with an option for a 2.5 year extended mission).
Disposal	Following the Operational Phase, the S/C is boosted 300 km above GEO altitude into a disposal orbit.

Table 4-3. Mission Sequences and Timeline

Mission Sequence and Events	Duration
Ascent and GTO Injection into a185x36086 km orbit @ launch and third-stage injection, separation, and Sun acquisition	L+27 Minutes
Geosynchronous Operations T=L + 27 minutes; Separation from third stage T=Separation+10 minutes; Activation of S/C T= Activation; Power Star Trackers/IMUs T= Activation + 5 minutes; Slew to Initial Attitude T= A + 21 hours; Apogee Trim Maneuver T= A + 2.25 days; Initiate AKM Prep. (Slew, Spin up) T= A + 2.5 days; Fire AKM Initial Checkout of S/C Subsystems Throughout	L + 27 minutes to L+2 1/2 days
Supersynchronous Operations T= AKM + 5 minutes; Spin down, Slew to Sun T= AKM + 4 Days; Deploy Sun Shield, Release AKM T= AKM + 4 Days to + 8 Days; Initial trim of Solar Precession, Trim Mass correction, State of Health Checkout T=AKM + 8 Days; Lower orbit to GEO	L+2 1/2 days to L+10 1/2 Days
S/C Outgassing, P/L Electrical Checks, S/C Calibration and Performance Verification, and Dynamic Balance	L+ 10 1/2 Days to L+30 Days
Open FAME Sensor Protective Covers; Conduct Instrument Tests and Calibrations; Commission Instrument	L+31 Day
Complete EE&C; Hand Over of Routine Flight Ops to FAME Flight Ops Crew	L+31 Day to L+40 Days
Funded 30 Month MO&DA; Science Ops, Science Algorithm Validation	L+41 Days to L+30 Mo.

window for the launch will be selected to minimize the duration of the eclipses during the baseline mission.

4.1.2.2 Launch Phase. This phase starts with first motion and is complete with separation of the S/C from the Delta's Star-48 third stage. The S/C controller, Sun sensor, receivers, and power control and distribution electronics (PCDE) are powered during this phase. The S/C controller is pre-loaded with an event list that is activated by third-stage separation. All solar array (S/A) panels are stowed during launch. The S/C Ordnance Control System (OCS) is "safed" and cannot be armed until after the S/C separates from the L/V. No ground station contacts are required during this phase.

4.1.2.3 GTO Phase. This phase starts with S/C separation from the third stage and is completed with the firing of the AKM 2.5 days later. After separation, the S/C controller enables a 10 minute timer to allow a safe distance before maneuvering. After timeout, the S/C controller powers the star trackers and IMUs and initiates Sun acquisition. The S/C aligns its -Y axis to the sunline to maximize the S/A power output. Six S/A panels are exposed when the arrays are stowed, three of which are used to maintain a positive energy balance. RF downlink communications are maintained at a low data rate (800 b/s). The S/C stays in this 10.6 hour GTO orbit for 5.5 revolutions around the Earth. Foldout 2, Figure F details the ground track from Launch through the Orbit Trim Phase. Table 4-4 lists the early on-orbit events.

Table 4-4. Early On-Orbit Events

Rev 0	The DSN ground station at Madrid is baselined for the first orbit. It has a 10 hour view of the S/C. Initial S/C State of Health (SOH) is verified and state vector information is collected via active ranging.
Rev 1	The DSN ground station at Goldstone is the primary site for this 10 hour rev with a hand-off to BP at the end. Additional orbit information and SOH is verified during this pass. An Apogee Trim Maneuver (ATM) burn schedule is uploaded on this pass to trim the L/V apogee injection errors. The ATM will be performed at perigee during the end of Rev 1.
Rev 2	The DSN ground station at Canberra is baselined for this pass. It is shorter (6.5 hours) and will be used to verify the orbit and SOH after the trim maneuver.
Rev 3	BP is the primary site for this pass and has a 10 hour contact time. The S/C will be uploaded with the scripted activities to plan the AKM on Rev 5. The load will be verified, as will the SOH of the subsystems.
Rev 4	The DSN ground station at Canberra is baselined for this pass. This pass will be used as a backup if other activities preclude the AKM script load on Rev 4. If everything is on schedule, the pass will be used to monitor SOH and orbit information.
Rev 5+	NRL's BP Satellite Tracking Facility is the primary site for this pass and actively monitors the AKM firing. The S/C is in continuous view of BP for the remainder of the mission.

4.1.2.4 Supersynchronous Orbit Phase. This phase starts with the AKM firing on 7/23/2003, and is completed after the S/C is placed into the GEO slot eight days later. The S/C's AKM is fired at apogee on Rev 5 at a longitude of ~57° west. The sequence of events for the burn consists of: (i) slew to the desired burn attitude, (ii) spin the S/C to 60 RPM, (iii) begin active nutation control to dampen nutation, (iv) fire the AKM, (v) despin the S/C, and (vi) slew to initial acquisition attitude

with the Sun on the -Y side of the S/C. At this point the S/C is in a super-synchronous orbit with a drift of approximately 3.8° per day to the west. Over the next 4 days, the following activities are performed: (i) slew the S/C to operational attitude with the Sun 45° from the –Z axis, (ii) eject the SRM casing, (iii) deploy the S/A/Sun shield, (iv) deploy the omni antenna, and (v) spin the S/C to 40 minutes per revolution. At this point the S/C can begin to be coarse trimmed for solar precession, and the high data rate mode of the RF communication system can be verified. Upon arriving at 88° west longitude, the S/C performs two burns, one to lower the perigee 300 km, the other 12 hours later to lower the apogee. At this point, the S/C is transitioned to the science operations phase.

4.1.2.5 Science Operations Phase. This phase starts with the S/C located at its GEO slot on 7/31/2003 and is completed after the S/C is placed into a disposal orbit. NRL's BP is the only ground antenna site required for science operations. The S/C checkout lasts for 20 days before powering on and operating the instrument. The instrument covers are left in place until operation commences. Once operation commences, the solar precession trim tabs are positioned to trim the precession rate and the trim masses are moved to align the spin axis of the S/C with the geometric axis. Once transitioned to science operations, the attitude control system on the S/C is effectively "disabled" and is in monitor only mode. In this mode, the star trackers and IMUs are active and process information for use by the instrument, but are not required to actively control the attitude of the S/C. No North-South stationkeeping maneuvers are required. Every 6-8 weeks, an East-West stationkeeping maneuver is planned to counteract the nominal orbit drift. The instrument does not accrue data for 6 to 8 hours during orbit repositioning.

4.1.2.6 Disposal Orbit Phase. When the baseline and extended missions are complete (nominally 5 years), the S/C is placed in a disposal orbit 300 km above GEO altitude. This is performed as a set of thruster burns; one to raise apogee by 300 km and the other 12 hours later to raise perigee. If required, the S/C can be operated upon completion of these burns to collect data.

4.1.3 Launch Vehicle and Trajectories. The L/V chosen for this mission is the Delta 7425, which includes the Star-48 third stage. The Delta 7425 launches from Cape Canaveral and can boost 1132 kg to GTO at 28.7° inclination.

4.1.3.1 Selection Rationale. The Delta 7425 was chosen because of the mass required to be placed in GTO. The current FAME mass of 1031 kg includes margin in each of the subsystems based on unit heritage. This leaves an additional 101 kg of margin at the system level due to the 1132 kg throw weight of the Delta 7425.

4.1.3.2 Nominal Trajectory Design.

❒ *Eclipse Issues:* Preliminary orbital analysis indicates eclipses lasting <20 minutes during the GTO phase. (The S/C battery is sized to handle operational eclipses of >70 minutes.) Once leaving GTO, the eclipse season does not begin until 9/6/2003 except for a single lunar penumbra of 61 minutes on 8/28/2003. The first eclipse season will end on 9/28/2003. The next eclipse season starts about 3/1/2004. The duration for this eclipse season and all following eclipse seasons is 3.3 weeks.

❒ *Insertion Errors:* The orbital insertion (3 sigma) at the end of the launch phase is anticipated to be 185 ±6 km (perigee) and 36,086 ±1000 km (apogee). The apogee uncertainty is trimmed by the S/C's on-board propulsion system.

4.1.3.3 Orbit Characteristics. The orbit chosen for this mission is GEO altitude with an inclination of 28.7° and a location of 88° west longitude. The NASA-GSFC recommended this orbital slot because it was available and least likely to interfere with adjacent S/C. The inclination results from the launch site location. To maximize the throw weight to orbit and because a limited motion tracking antenna is proposed, inclination or inclination errors need not be removed.

4.1.3.4 Mission Timelines. Table 4-3 describes the mission timeline. Operations begin after positioning the S/C at the GEO slot of 88° west, performing the S/C and instrument SOH checks, and waiting for the S/C hardware to complete outgassing (nominally 30 days). The normal mode of operations is to position the S/C -Z axis 45° to the Sun and spin to one revolution per 40 minutes. The S/C star tracker and IMU are used to determine the vehicle attitude with time. The S/C bus sends the attitude updates to the instrument electronics via the 1553 bus. The instrument uses this information (position and spin rate) and its on-board star cata-

log to initiate an acquisition mode. After initial acquisition, the instrument derives spin rate and position information internally. The S/C will continue to monitor attitude and rate information but does so transparent to the normal operations. Because the S/C is in continuous view of BP, the S/C SOH is continually monitored. Normal operations permit a daily load file to transmit updates to the on-board star catalog, and correct for clock drift. Key telemetry is alarmed to indicate red and yellow limits. Stationkeeping maneuvers are planned well in advance so that all parties are aware of the impacts and potential outages.

4.1.3.5 Orbit Determination. The OD process is driven by the science requirement for post-processed velocity knowledge accuracy of 1 cm/sec to correct for velocity aberration. Special processing is required because conventional products have insufficient fidelity. For typical GEO satellites, the expected Space Surveillance Network (SSN) accuracy is ~60-70 cm/sec (largely driven by modeling errors). Additional post-processing of these products with other data can achieve only ~20-40 cm/sec. To meet FAME requirements, both range and range rate must be used. FAME will acquire near-continuous range and range rate data from the BP ground station. The S/C transponder is nominally operated in the coherent mode, and the downlink carrier frequency provides S/C ranging information. The carrier frequency is always available during downlink transmission, and its presence is not dependent on downlink data-rate. The down-converted carrier frequency information is processed by the ground receiver and routed to the Carrier Doppler Measurement Systems (CDMS) described in Section 4.7. This system is operated continuously and creates doppler data files for processing. By combining doppler and SSN data, the velocity knowledge requirement of 1 cm/sec is met. The range rate data are processed using a polynomial-fitting algorithm to minimize measurement noise and to desample the data from the planned 1 Hz gathering rate. Data processing uses the GEODYN orbit model. Preliminary analysis indicates that SSN and BP CDMS data are sufficient to obtain the desired knowledge of FAME's orbit within 1 to 2 weeks of receipt.

4.1.4 Communications Networks. FAME's data network uses BP; a Science Operations Center (SOC) located at USNO, and data distribution links via the Internet with Co-Is and the public. During GTO operations (2 1/2 days), FAME uses NASA's DSN in addition to BP. FAME complies with CCSDS Advanced Orbiting System and Telecommanding Standards. Commercially available communication protocols (e.g., TCP/IP, FTP, and NFS) are used to transfer the data from the BP to the SOC. The processed data products are presented via the Internet in Astro-XML format.

4.1.5 Summary Trade Studies. A number of trade studies and concept designs were conducted during the CSR, as shown in Table 4-5.

Table 4-5. Summary Trade Studies

- Optical design focal length, FOV, spin rate,
- Optical system manufacturability,
- Focal plane assembly design optimization,
- Input catalog vs. threshold readout,
- Science data compression and formatting studies,
- CCD studies and centroiding test,
- Photometric filter selection,
- Thermal control for optical systems,
- Solar radiation precession analysis,
- Orbit selection vs. communication rate,
- Ground station operation design,
- S/C location with respect to ground station location,
- Project cost analysis, and
- Risk analysis.

4.1.5.1 Planned Mission Design Trade Studies.

❒ *Alternative Orbits:* Elimination of E-W stationkeeping is desired to reduce propulsion requirements and to allow continuous stellar mapping. A preliminary orbit analysis was performed that allowed for the annual E-W drift and maintained a minimum of 250 km separation from other GEO S/C. Further work is required to verify that no other interference conditions exist. To minimize/eliminate stationkeeping requirement, non-circular orbits that meet our mission profile were examined. The most promising candidate is a GEO into which FAME would be inserted from the supersynchronous phasing orbit by a single perigee-lowering maneuver in lieu of perigee and apogee lowering maneuvers. This alternate plan would simply lower perigee by 600 km, resulting in an orbit with an eccentricity of 0.007 and an argument of perigee of 352.5°. This puts the perigee at an altitude below other GEO satellites and avoids possible collisions. The resulting orbit has a first order perigee rotation rate of approximately 7°/year and results in a minimum of 285 km separation from other GEO S/C for 5 years. During this time, no E-W stationkeeping maneuvers are performed, allowing the LAN to drift freely. The

baselined ground station antenna can provide coverage over the mission life. Activities covered under Phase B include: (i) communications interference, (ii) analysis of luni-solar effects, and (iii) perturbations to orbit altitude.

❒ *Secondary Experiments:* The current system includes mass uncertainty at the subsystem level and mass margin at the system level. As the program progresses, it is anticipated that the ability to add secondary experiments to the system can be addressed. These experiments could be: (i) ejected by the L/V into GTO orbit, (ii) ejected with the S/C AKM in supersynchronous orbit (similar to the *Clementine* Interstage Flight Experiment), or (iii) kept with the S/C in GEO.

4.1.6 Top-Level Mission Requirements. Table 4-6 lists the requirements, constraints, and environments having the greatest impact on the mission.

Table 4-6. Top-Level Mission Requirements

Requirement	DRM Derived Parameter
Mission Life:	▪ 2 1/2 years (Baseline Mission) ▪ 5 year extended mission (consumables for 5 years)
Science Data Volume	27.7 Gbits per day
Science Instrument (s/w/p)	2 x 1 m cylinder 229 kg 269 W
Instrument Cleanliness	Class 100,000 until Instrument I&T; Class 10,000 thereafter
Maximum S/C Mass to Orbit	1132 kg (NASA Guidelines)
Required Orbit	Geosynchronous at 28.7 deg inclination, 88° West longitude, inclination with respect to ecliptic >45°
Navigation Knowledge	1 cm/sec
Comm Contacts per Day	Continuous (24 hour downlink)
Onboard Time Maintenance	S/C time 1 msec/day
Mission Operations Concept	▪ Single ground station with high degree of autonomy ▪ Close cooperation between MOC and SOC
Launch Date	▪ 2003 (AO Guidelines)
Radiation (total dose per year)	2.5 krads (5.08 mm)
Launch Loads: Acceleration Acoustic Shock	 ▪ 6.5 g axial, ±3.5 g lateral ▪ 130 dB @ 250 Hz ▪ 4100 g @ 1500 Hz
EMI	▪ Range requirements (radiated susceptibility) ▪ Self compatibility

4.2 Spacecraft Bus and Payload Systems.

4.2.1 System Description. The FAME S/C consists of a S/C bus and a single instrument subsystem. A detailed block diagram of the S/C is presented on Foldout 3, Figure A. The primary requirements of the instrument are to measure the positions, proper motions, parallaxes, and photometry of stars as faint as 15th magnitude. The primary requirements of the S/C Bus are to place the instrument in the proper orbit, provide a long-term stable platform for the instrument, and collect and forward the science data to the Ground Network.

❒ To allow the instrument to be put in the proper orbit, the S/C bus was designed with a central thrust tube and structure to accommodate an Apogee Kick Motor and a hydrazine propulsion system. Trades were conducted to determine whether to eject the AKM or keep it for the duration of the mission. The decision to keep the AKM was rejected due to uncertainty in balance after firing. Ejecting the AKM in the disposal orbit enables the S/C to be accurately balanced on the ground and trimmed with balance masses on-orbit to achieve the spin axis alignment requirements. The hydrazine propulsion system was selected after analyzing the performance and complexity of various options, including cold gas and bi-propellants. Hydrazine offers higher performance and a simpler design.

❒ All actively moving components were eliminated. No reaction wheels are employed in the system design, and Ring Laser Gyros were eliminated due to the internal dither mechanism. The S/C bus thermal design and operations modes maintain constant power and temperatures to eliminate structural expansion/contraction. Passive damping satisfies the instrument's low jitter requirements.

❒ The S/C bus accommodates the instrument, collects mission data, and transmits instrument data to the ground network. To provide the instrument with initial acquisition information (S/C attitude and roll rate) the S/C bus employs star trackers and Inertial Measurement Units (IMUs). After initial instrument acquisition, the S/C bus collects, buffers, formats for downlink and transmits the instrument data to the ground network. The vehicle attitude and SOH are continually monitored for nominal conditions.

❒ The Instrument Subsystem is mounted to the S/C bus with three point flexures. These flexures are shimmed at assembly to align the instrument properly to a geometric reference mirror on the S/C bus. The instrument deck is thermally isolated

from the S/C and the interface (I/F) points are thermally controlled.

4.2.2 Design Approach. The system and components for the FAME mission were chosen to maximize the use of current space technologies to reduce overall system risk. Those technologies are either baselined for current space missions or have already flown. The S/C bus uses existing components/subsystems and repackaging of existing designs. The instrument maximizes proven, state-of-the-art technologies used for current spaceborne optical systems.

A preliminary risk analysis has been performed to identify and to mitigate the highest risks. Redundancy in many of the subsystems also reduces overall risk. The following subsystems include redundancy: star trackers, inertial measurement units, transponders, solid state power amplifiers, battery (extra CPV), portions of the CT&DH (uplink/downlink module, ACS/RCS module, power converters, oscillators), and the instrument processing elements. Additionally, the hydrazine system is planned for use as a backup to the solar precession, and propellant has been budgeted for this use.

4.2.3 Spacecraft Overview.

4.2.3.1 Instrument. Section 4.4 provides an extensive instrument description, including information on size, mass, and power requirements, and fields-of-view (FOV), pointing, and stability needs. To accommodate the instrument baseline, a 50% power margin and 20% mass margin is included in the Power and Mass Budgets.

4.2.3.2 Spacecraft Bus. Section 4.3 describes in detail the S/C bus subsystems. The S/C bus comprises the following: ADCS, EPS, RF, CT&DH, FSW, thermal, structures, mechanisms, propulsion, and S/C integration and test. Because the S/C bus uses many "off-the-shelf" components, a 25% power margin was applied. The mass margins vary between 5% and 20% depending on the heritage of each of the components; off-the-shelf components received a mass margin of 5% while derivations of existing designs received margins of 20%. (A 25% margin was applied to the propellant budget at the subsystem level.)

4.2.3.3 Flight Software Overview. The S/C bus FSW is described in detail in section 4.3.6. FSW provides the required S/C bus functionality and is derived from a requirements flow-down from other S/C subsystems. Maximum S/W re-use is planned from other NRL programs, including *Clementine*, MPTB and NEMO. The RAD6000 provides ample margins on processor and memory requirements. The FSW requirements are established during Phase B, and parsed into functional units with defined inputs and outputs. New code is written in the Solaris environment under VxWorks. A S/W development test bed is established using "brassboard" hardware and I/F simulators to provide early and quick verification of S/W functionality and I/Fs.

4.2.3.4 Integration. The integration approach is similar to that employed on the *Clementine* program. The FAME S/C integration is further simplified by focusing all electronics hardware on two decks; a single electronics deck on the S/C bus, and the instrument deck. I/Fs between the instrument and the S/C have been simplified with maximum use of standard buses and minimum wire count. The S/C bus integration begins with a mockup of the electronics deck used for flight harness fabrication. As the brassboard Engineering Model (EM) hardware becomes available, it is integrated on this deck. This allows I/Fs, harness, flight and ground S/W, test procedures, and test equipment to be verified without jeopardizing the flight hardware. At the appropriate time, the harness is transferred to the flight structure and the EM units are replaced with flight units. I/F simulators of both the instrument and S/C bus are manufactured and tested to reduce risk when the flight instrument is integrated to the S/C bus.

4.2.4 Flight Heritage. Foldout 3, Table A provides an Equipment Manifest detailing the mass, mass margins, suppliers, and heritage of the equipment chosen for this program. The criteria used to chose the equipment consists of: (i) requirements, (ii) heritage, (iii) cost, and (iv) mass. More than 70% of the hardware chosen for this mission has design heritage.

4.3 Spacecraft Bus Subsystems.

4.3.1 Spacecraft Bus Overview. The primary requirements of the S/C bus are to place the instrument in the proper orbit, provide a long-term stable platform for the instrument, and collect and forward the science data to the Ground Network. Table 4-7 lists the top-level S/C bus requirements.

Detailed descriptions of each subsystem are provided in Sections 4.3.2 through 4.3.10.

4.3.2 Attitude Determination and Control System (ADCS). The ADCS acquires a safe orientation after initial separation, orients the spin axis for perigee raising, and maintains pointing during AKM firing. Subsequently, it re-orients the S/C for all orbit trim and stationkeeping maneuvers, as well as any safe hold operations. The ADCS principal function is to generate the critical scan motion required by the FAME instrument to perform its star mapping mission. Figure 4-1 presents a top-level ADCS block diagram. Independent review confirmed the viability of using solar radiation pressure (Figure 4-2).

4.3.2.1 Characteristics and Requirements.

❒ *General Requirements:* Stringent motion requirements (Table 4-8) to perform stellar mapping have been developed to: (i) prevent star image smearing, (ii) maintain at least 30% overlap between adjacent great circle scans, and (iii) provide the desired spin and precession rates. Other mission phase requirements are well within conventional capabilities. AKM firing at 60 rpm requires initial spin axis pointing to ±1 deg accuracy. A static Sun sensor provides 2-axis attitude knowledge well within the ±0.5 deg requirement for all other non-science modes.

❒ *System Design Trades:* Early trade studies eliminated both magnetic torques and reaction wheels as candidate control actuators to support star mapping requirements. Magnetic torquers for spin change, precession, and disturbance rejection at GEO altitudes grew unacceptably large, and wheels exceeded the FAME instrument's low vibration and jitter requirements. The choice reduced to using active thruster control for generating scan motion, or utilizing a passive technique wherein solar radiation pressure is employed to precess the momentum vector during stellar mapping. During stellar mapping, the S/C rotates about its principal MOI axis with a period of 40 minutes. In this mode, the angular momentum axis precesses about the sunline describing a cone with a ~45° half-angle. The precession period is 20 days in duration, and the cone slowly follows the Sun as it traverses the ecliptic. This motion can be achieved by either active or passive means by: (i) incrementally slewing the momentum vector along the desired trajectory using thrusters, or (ii) continually providing a net solar torque normal to the plane of the momentum and sunlines. We chose the latter approach because it provides a decidedly smoother motion. Thrusters serve as the primary actuators during all other S/C phases, and these same thrusters provide a low-risk alternate back-up capability for precession.

❒ *Overview of Attitude Control Modes:* Six control modes support all mission phases: inertial pointing; Sun pointing; safehold; active nutation control (ANC); open loop burn; and standby. Table 4-9 summarizes each control mode, along with supporting information.

▫ *Inertial Pointing:* This mode points S/C in inertial space as commanded by ground. Orientation is maintained with thrusters activated, or allowed to drift at prescribed motion for stellar mapping.

▫ *Sun Pointing:* This mode points Y or Z axis to Sun, depending on whether or not Sun shield is deployed.

▫ *Safehold Mode:* Similar to the Sun pointing mode except that it is implemented in the ACS/RCS module versus the CPU. Safehold is entered from either the Sun pointing or the Inertial pointing mode when Sun angle or vehicle rates exceed specified limits. Safehold mode nulls all rates and places the Sun between the -Y and -Z axes.

▫ *ANC:* ANC is used to damp the coning motion that results from the open loop spin up required for AKM firing. ANC damps the half cone angle to below 0.25 deg, with a time constant of approximately 30 seconds, prior to motor firing. ANC would be ineffective during the SRM burn and is disabled during this event. ANC is re-enabled after the burn to again reduce coning motion in preparation for the spin down.

▫ *Open Loop Burn (OLB) Mode:* This mode is commanded from ground and permits use of any thruster, individually or in combination, for a specified duration, to support spin change or velocity trim maneuvers.

▫ *Standby Mode:* This mode performs no active control function, but it monitors sensor data. It is entered on boot-up and if any anomalous ADCS event occurs. Standby is the only mode, other than safe-hold, that is autonomously activated. All other modes must be commanded from the ground.

Table 4-7. S/C Bus Requirements Summary

Description	Requirement	Capability	Reference
ADCS			4.3.2
Attitude Accuracy (Non-Mapping)	0.5 Deg (3 sigma) Each Axis	0.25 Deg	
Attitude Accuracy (Mapping)	30 Arcsec (3 sigma) Pitch, Yaw	10 Arcsec	
Rate Knowledge	1 deg/hr	0.2 deg/hour	
ACS Capability	3 axis, spin up, spin down, precession	Meets	
Delta V Capability	Orbit Raising/Lowering, Stationkeeping	Meets	
EPS			4.3.3
S/A Power Generation	485 Watts EOL (2 1/2 years)	Meets	
Battery Storage	25 Ah, 30V (max DOD <80%)	Complies (Max DOD = 75%)	
Energy Management	Provide Charge Regulation and Distribution	Meets	
Mechanism Control	Control Trim Tab and Trim Mass Motors	Meets	
Ordnance	Provide S/C Ordnance Control	Meets	
RF			4.3.4
Transmit Data	800 b/s to 409.6 kb/s	Meets	
Receive Data	2 kb/s	Meets	
Range Capability	Active and Coherent Ranging	Meets	
Provide RF Link	3 dB Margin in All Mission Phases	Meets	Foldout 5, Tables A - C
CT&DH			4.3.5
Encode Data for Downlink	CCSDS w/Reed Solomon & Conv. Encoding	Meets	
Process uplink commands	Authenticate and Route commands	Meets	
Clock Accuracy (Drift)	1 msec/Day	10 μSec/Day	
S/C Communication	Standard Communications Bus	Meets (1553)	
Instrument Data	Hi-Speed Data I/F	Meets (QHSS)	
Flight Software			4.3.6
Operating System	COTS OS	Meets (VxWorks)	
CMD/TLM Processing	Uplink Processing Mission Data and HKP Processing	Meets	
Stored Commanding	Autonomous and Stored Commanding	Meets (SCL)	
ADCS	Control S/C Attitude	Meets	
Processor Margin	100%	Meets	Tables 4-20 through 4-26
Memory Margin	100%	Meets (except 8051)	
Thermal			4.3.7
Instrument I/F	20 ±1/2°C	Meets	
Box Temperatures	0 to 40°C	Meets	
Battery Temperature	-10 to 20°C	Meets	
Structures			4.3.8
Factors of Safety	1.25 Yield, 1.4 Ultimate	Meets	
Mechanisms			4.3.9
On-Orbit Spin Axis Trim Error (Instr. to Spin Axis)	±30 arcsec	±15 arcsec	
Reaction Control System			4.3.10
Circularize Orbit	AKM (Star 30BP)	Meets	
Thruster Arrangement	Spin Control, Delta V, Stationkeeping	Meets	
Safety	Meet EWR 127-1	Meets	
Stationkeeping	88 ±1°	Meets	
Integration and Test			4.6
Instrument to S/C Alignment	0.25 milliradians	0.1 milliradian (shims)	
Spin Balance	0.5 milliradians	0.25 milliradian	

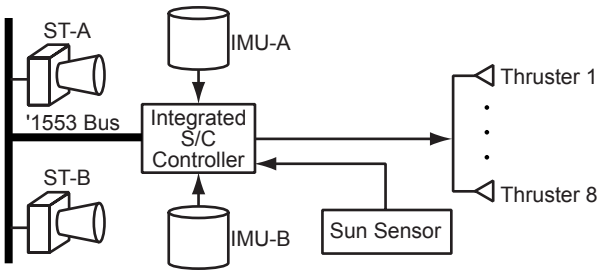

Figure 4-1. ADCS Block Diagram

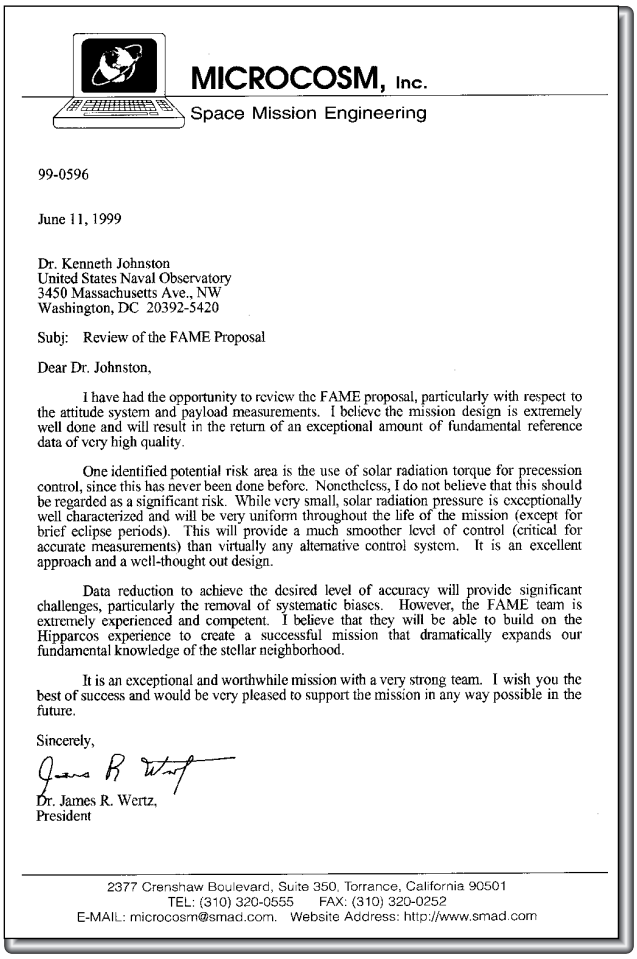

MICROCOSM, Inc.
Space Mission Engineering

99-0596

June 11, 1999

Dr. Kenneth Johnston
United States Naval Observatory
3450 Massachusetts Ave., NW
Washington, DC 20392-5420

Subj: Review of the FAME Proposal

Dear Dr. Johnston,

I have had the opportunity to review the FAME proposal, particularly with respect to the attitude system and payload measurements. I believe the mission design is extremely well done and will result in the return of an exceptional amount of fundamental reference data of very high quality.

One identified potential risk area is the use of solar radiation torque for precession control, since this has never been done before. Nonetheless, I do not believe that this should be regarded as a significant risk. While very small, solar radiation pressure is exceptionally well characterized and will be very uniform throughout the life of the mission (except for brief eclipse periods). This will provide a much smoother level of control (critical for accurate measurements) than virtually any alternative control system. It is an excellent approach and a well-thought out design.

Data reduction to achieve the desired level of accuracy will provide significant challenges, particularly the removal of systematic biases. However, the FAME team is extremely experienced and competent. I believe that they will be able to build on the Hipparcos experience to create a successful mission that dramatically expands our fundamental knowledge of the stellar neighborhood.

It is an exceptional and worthwhile mission with a very strong team. I wish you the best of success and would be very pleased to support the mission in any way possible in the future.

Sincerely,

Dr. James R. Wertz,
President

2377 Crenshaw Boulevard, Suite 350, Torrance, California 90501
TEL: (310) 320-0555 FAX: (310) 320-0252
E-MAIL: microcosm@smad.com. Website Address: http://www.smad.com

Figure 4-2. Independent Review Letter

❒ *Attitude Control Mode Sequences:* These modes are applied to each mission phase as follows. After L/V separation, a stored command activates the Sun pointing mode to null S/C rates and to slew the -Y axis S/A to the Sun. To complete initial acquisition, the OLB mode is used for spin-up (<1 RPM) to provide stability during the 2.5 days preceding AKM firing maneuvers. The Inertial Pointing mode despins the S/C and orients the z-axis for the perigee burn. The OLB mode provides spinup (60 RPM), and ANC is activated. ANC is then deactivated for AKM firing. After AKM depletion, the OLB mode provides spin-down (to 1 RPM), and the inertial pointing mode is activated to re-orient for AKM jettison. After jettison, the S/A and Sun shield are deployed and the Sun pointing mode is activated. The inertial pointing mode orients the vehicle for initial orientation, orbit trim maneuvers, and for stellar mapping. It supports stationkeeping and the return to stellar mapping. Our baseline approach minimizes the number of modes and on-orbit S/W, and was successfully used on previous NRL missions.

Table 4-8. ADCS Requirements

Control	Requirement	Capability
Spin Period	40 min. ±5%	Complies
Precession Period	20 days ±10%	Complies
Spin Rate Variation	±54 mas/sec	±40 mas/sec
Precession Rate Variation	±600 mas/sec	±200 mas/sec
Sun Angle	45 ±5 deg.	Complies
Jitter	<500 μas	Complies
Spin-Axis Alignment Error	±30 as	<10 as
Nutation Control (Cone Angle)	±10 as	Passively damped to zero
CG Offset (from Spin-Axis)	±5 mm	Complies
Sun Shield Sweep Angle Error	±0.25 deg.	±0.1 deg
Knowledge	**Requirement**	**Capability**
Sun Angle	±0.5 deg.	±0.25 deg.
Inertial Attitude	±10 as	Complies
Transverse Rate	±2 as/sec	0.2 as/sec
Spin Rate	±1 as/sec	0.2 as/sec

Table 4-9. ADCS Control Modes

Mode	Applicability	Sensor Used
Inertial Pointing	▪ Inertial pointing of any axis ▪ Prior to spin up for AKM fire ▪ Orbit trim maneuvers ▪ Null rates ▪ Back up for stellar mapping	Star trackers & 1 of 2 IMUs
Sun Pointing	▪ Point X or Z axis to desired Sun angle ▪ Initial acquisition ▪ Nulls rates before slewing	Sun sensor & 1 of 2 IMUs
Safe Hold	▪ Activated by EPS trigger ▪ Switch to other IMU ▪ Slew to Sun	Sun sensor & other of 2 IMUs
Active Nutation Control	▪ Damp cone angle after spin up and prior to AKM fire	1 of 2 IMUs
Open Loop Burn	▪ Spin up/down ▪ ΔV trim maneuver	None
Standby	▪ Initial state at turn on ▪ Monitors ADCS	All

❒ *Solar Torque Precession:* We have chosen to employ solar pressure, normally considered a low level disturbance, to our advantage to provide the gentle torque needed to produce the slow precession required for stellar mapping. We do this by using the physical properties of the instrument's Sun shield, and by controlling orientation to achieve the necessary difference between center of pressure and center of mass. Errors arising from CG migration with fuel usage or variation in Sun shield optical properties, misalignments, and uniformity can be corrected by in-orbit adjustment of the shield's trim tabs. With no moving parts during observations and motion provided by solar pressure torque, there is no source for jitter in this essentially rigid S/C. After transition to the initial state for stellar mapping (Sun angle at 45 degrees and spin rate at 540 deg/hr), the inertial pointing mode is turned off and the ADCS remains in Standby (monitor) mode while solar radiation torque precesses the S/C's spin axis. If necessary, the inertial pointing mode can be commanded on to precess the spin axis along the desired trajectory (precessing ~0.5 degrees every 1.3 spin cycles). Note that there is no active control when using solar torque precession for stellar mapping, and control is limited to once per spin. Thus, the disturbance torque environment must allow the rate variation and jitter requirements (see Table 4-8) to be met without active control. Extensive simulations show that these requirements are met with appropriate constraints on the S/C's mass and optical properties (see Table 4-6 and Table 4-8). Table 4-10 lists typical environmental torques, while Figures 4-3 and 4-4 show the impact of these torques on the solar precession. The bias solar torque in Table 4-10 is the passive control torque while the others are disturbances. Figure 4-4 plots the movement of the tip of the angular momentum vector in 3D space with the x-axis along the Sun line. In this case, the solar torques are higher than desired and the precession cone is completed in less than 20 days. Also, because the Sun is moving, the path is not a perfect circle; instead, it is egg-shaped. The movement of the Sun, coupled with the precession rate, is the primary reason for the variation in Sun angle shown in Figure 4-4. Disturbance torques also affect this motion. Other disturbances include fluid slosh, Earth albedo, Earth thermal emission, S/C thermal radiation, S/C expansion/contraction during eclipse season, solar radiation fluctuation, and the various facets of the vehicle, including the cavity left by the SRM jettison. A preliminary assessment of each of these disturbances is underway; those that have been completed meet the performance requirements (see Table 4-11). A detailed disturbance analysis will be performed in Phase B.

❒ *Solar Torque Trim:* The S/C's Sun shield provides the primary control surface for the solar precession, and its trim tabs permit on-orbit adjustment for changes in Sun shield optical properties, shield alignment, uniformity, and for CG migration as fuel is depleted. For the given mass properties and spin rate, the required precession torque is ~3×10^{-6} N-m. This value is achieved by sweeping the shield back 3 degrees. The sweep angle is set before launch, and a precise value is not required (see Table 4-8) given the trim tab's capability to fine tune solar torque on-orbit. Figure 4-5 shows the solar torque sensitivity to variations in Sun shield sweep angle and to the coefficient of specular reflection (Cs). To achieve the desired torque, the sweep angle setting must be adjustable over a 4 degree range before launch. Once on-orbit, any further adjustments are made by moving the trim tabs while the Sun shield remains fixed. Figures 4-6 through 4-8 show the solar torque sensitivity to variations in tab sweep angle, shield sweep angle, Cs, and CG location (along the spin-axis). In all cases, the chosen trim area and location provide considerable authority and sensitivity in adjusting for these minor variations. The precession rate data required for trimming the solar torque are provided primarily by the science instrument. Data are processed on the ground and commands generated for the new tab positions. All trim tabs are moved together to change the constant precession torque. Individual tabs are moved to change periodic terms at spin frequency. Solar torque trimming is expected to take several weeks initially, but subsequent adjustments (on a quarterly or yearly basis) will have a negligible impact on stellar mapping.

▫ *Attitude Sensor Description:*. The ADCS sensor suite consists of a five-eye Sun sensor, two star trackers, and two IMUs. The selected sensors and top level performance values are shown in Table 4-

Table 4-10. Environmental Torques

Environmental Torques in Sun Frame			
	Torque (Nm) Amplitude		
	Bias	Orbital Period (1x, 2x)	Spin Period (1x, 2x)
Solar	3×10^{-6}	0	1×10^{-7}
Gravity Gradient	0	2.5×10^{-8}	2×10^{-9}
Magnetic	0	3×10^{-9}	1.5×10^{-8}

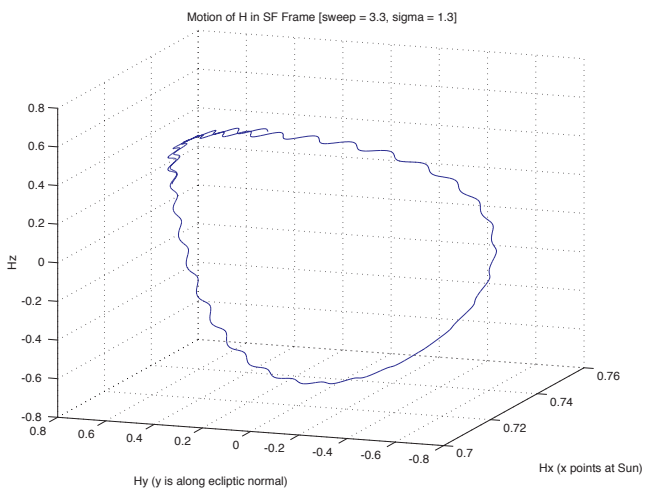

Precession over a 20 Day Period

Figure 4-3. Momentum Vector Precession

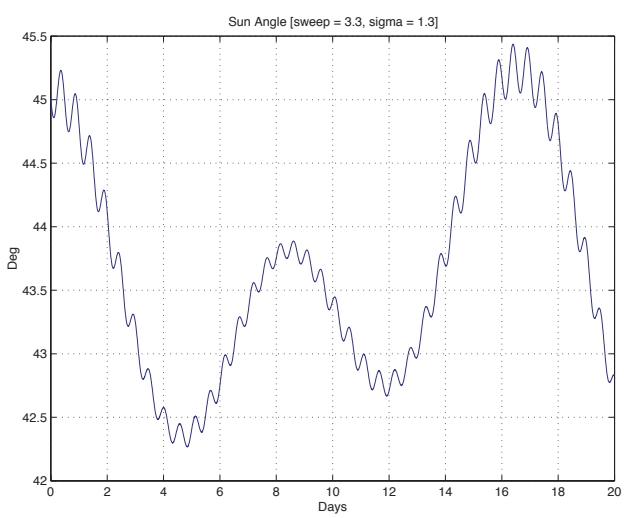

Figure 4-4. Sun Angle Variation

12. These sensors meet the knowledge requirements given in Tables 4-8 and 4-13 while balancing cost and reliability. Both horizon sensors and magnetometers were eliminated for consideration as they do not operate well over the full range of FAME orientations and altitudes. And while most of the control modes do not require precision pointing knowledge, initialization of the science

Table 4-11. Miscellaneous Disturbances

Disturbance Torque Source	Max. Disturbance	Basis for Estimate
Fluid Slosh	Negligible	▪ CG movement of less than a few microns and fuel slug movement dictated by fluid angular momentum and estimated gap volume (200 cm^3)
Earth Albedo	▪ 0.25 mas/sec (spin) ▪ 40 mas/sec (precession)	▪ 90% albedo on 28 m^2 area and that this is roughly a factor of 50 less than the nominal solar torque of 3^{-6} Nm
Earth Thermal Emission	▪ 0.05 mas/sec (spin) ▪ 8 mas/sec (precession	▪ Factor of 5 less than 90% albedo calculation
SC Thermal Radiation	▪ 0.2 mas/sec (spin) ▪ 20 mas/sec (precession)	▪ Factor of 5 less than 90% albedo calculation
Expansion/ Contraction of S/C	TBR	TBR
Solar Radiation Variation	0.2 to 2 mas precession angle fluctuations	▪ Spin dynamics simulations incorporating SOHO/VIRGO solar irradiance data
Solar Wind Fluctuation	Negligible	▪ Geosynchronous orbit is protected from the solar wind by the Earth's magnetosphere
AKM Cavity	TBR	▪ Cavity is painted to provide diffusely reflective surface
Material between Sun shield panels	TBR	▪ Uniform geometry and optical properties

instrument requires 10 arcsec accuracy, making a star tracker necessary. We have selected the BATC CT633 star tracker because it meets these requirements, is light weight, outputs attitude quaternions (minimizing code development), and is based on the flight-proven CT631. S/C rate data are required for most of the ADCS modes. The Inertial pointing, Sun pointing, and Safehold modes use rate information for nulling vehicle rates and feedback during slews. ANC uses the rate data for sensing the transverse rate. The LN200 bias drift, scale factor stability, and noise characteristics allow the ADCS performance requirements to be met while doing so at low cost. NRL has substantial experience with this device on *Clementine* and ICM. The Adcole 16764 five-eye Sun sensor is chosen because it meets requirements, provides 4π Steradian coverage, and NRL has significant experience with this unit. The Sun sensor is used for the Sun pointing mode and Safehold mode. While it may be used as a backup to the star tracker Inertial pointing mode, it will not provide the accuracy required for science initialization. Nevertheless, this will be

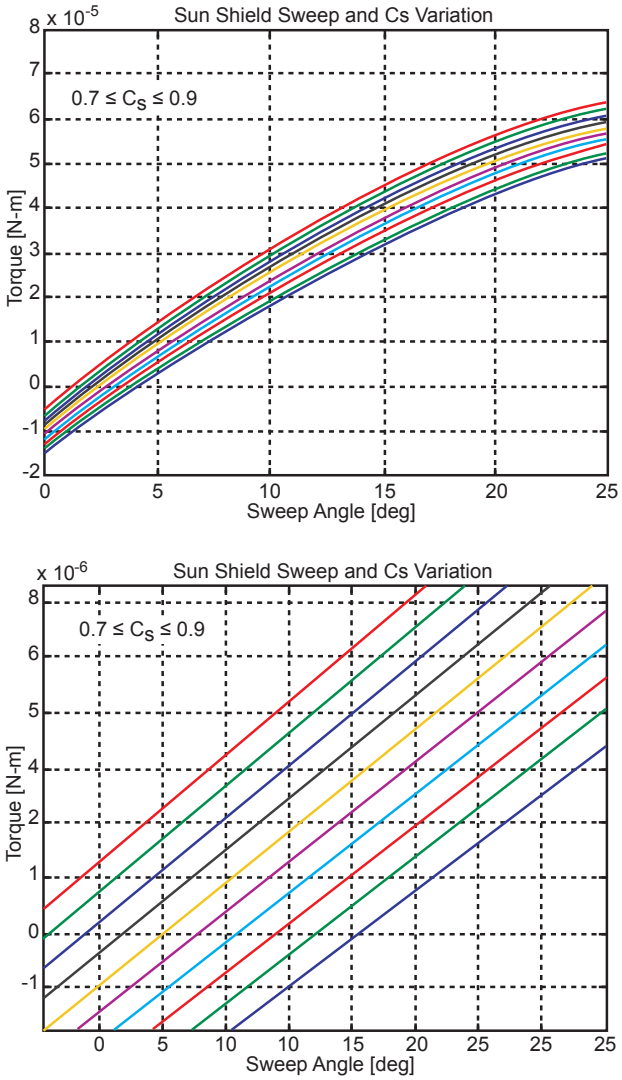

Figure 4-5. Sun Shield Sweep & Cs Variation

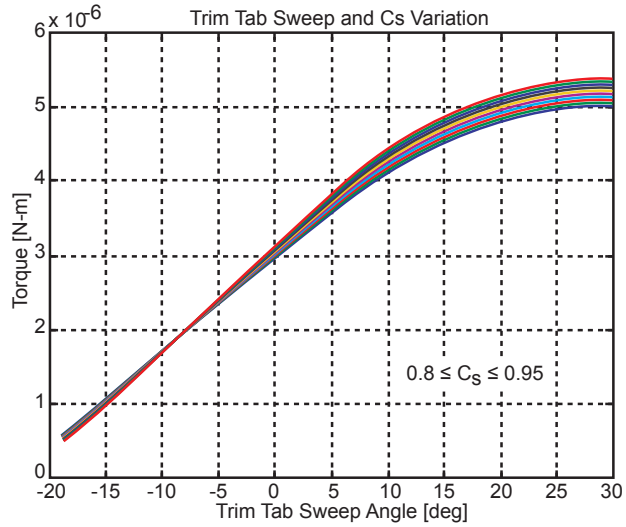

Figure 4-6. Trim Tab Sweep and Cs Variation

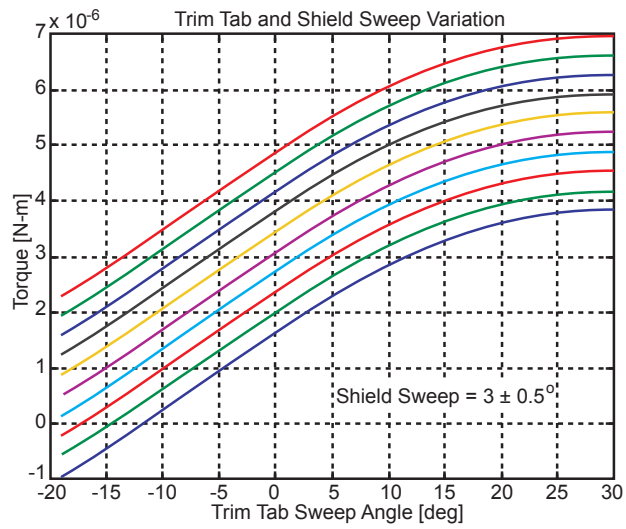

Figure 4-7. Trim Tab & Shield Sweep Variation

further studied in Phase B. The Standby mode does not have sensor requirements per se, but the data are collected for health monitoring and coarse solar torque trimming. Science data are used for precision solar torque trimming. The Open loop burn mode has no sensor requirements.

❒ *S/C Safehold:* Three different subsystems (EPS, ADCS, and RCS, with CT&DH supporting each) can initiate S/C safing. The S/C's response depends on the limit "triggers," which are tailored to the mission specifics. When either the attitude or rate is out of limits, an ADCS trigger places the system into the standby mode. When the thruster pulse exceeds a specified "on-time" value or the number of pulses over a given period is excessive, an RCS trigger disables the valve drivers. There are two EPS triggers. A S/W trigger occurs when the battery Depth of Discharge (DOD) exceeds a specified value and results in a load shedding and transition from the current ADCS mode to safe-hold mode. A hardware trigger occurs when DOD reaches a larger value and further sheds loads to only the essential system bus. Recovery from any safing activity requires ground commands.

4.3.2.2 Cost-Reduction Design Features. The ADCS design incorporates sensors with simple I/Fs for which little S/W or hardware development is required. Additionally, NRL has significant experience with the chosen sensors. This leads to minimal non-recurring costs in S/W development,

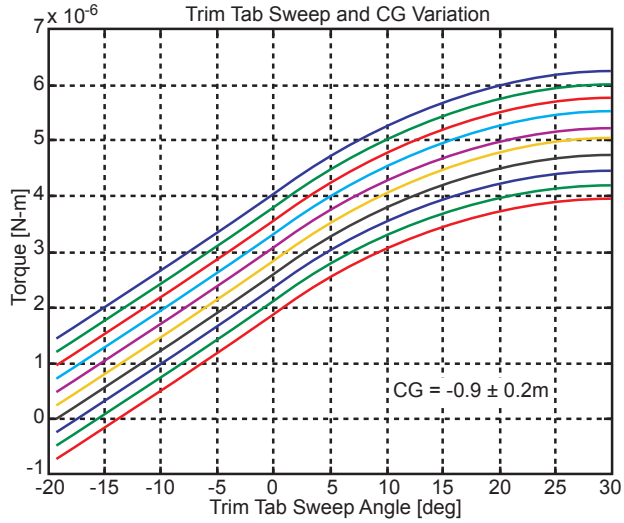

Figure 4-8. Trim Tab Sweep and CG Variation

Table 4-12. ADCS Sensor Specs.

Adcole 16764 Sun Sensor	
FOV (each sensor)	±64˚ 2-axis
FOV (system)	4π Steradian
Accuracy	±0.25˚
LN-200 Gyro (Calibrated)	
Bias	0.2˚/hour
Scale Factor Stability	100 ppm
Max. Rate	1,000˚/sec
CT-633 Star Tracker	
FOV	20x20
Accuracy (cross-boresight)	10 as

Table 4-13. Control Mode Requirements

Mode	Control	Knowledge
Inertial Pointing	±0.1˚	±0.05˚
Sun Pointing	±1.0˚	±0.5˚
Safehold Mode	±5.0˚	±2.0˚
Open Loop Burn	N/A	N/A
Standby	N/A	N/A
ANC	±0.25˚	±0.5˚/s @60 rpm

hardware design, and component integration and testing. IMU and Sun Sensor S/W can be reused from LACE, *Clementine*, and ICM as can the I/F designs. Most of the CT633 S/W is internal and the data I/F is the 1553 bus. The ability of the science instrument to perform its own inertial and rate updates provides significant relief to the ADCS requirements. This permits the selection of less accurate, less expensive ADCS components.

The S/C bus has been designed such that environmental disturbance torques are small and high-precision closed loop control is not required. This also permits selection of less accurate, less expensive ADCS sensors.

4.3.2.3 Resource Margins and Reserves. The ADCS design provides large margins against almost all key performance parameters (see Table 4-8). Any parameter with a margin below 50% will be a primary study area in Phase B. One such parameter is the spin rate variation. Its value is driven by vehicle mass properties (and the resulting gravity gradient torque) and the solar torque variation from Sun shield optical non-uniformity. Of these only the second can be a significant cost driver. Hence, we have added approximately $300k to the budget to cover this effort.

4.3.2.4 Master Equipment List. All ADCS components (star tracker, IMU, Sun sensor) are specified by NRL and subcontracted to a qualified vendor. NRL performs ADCS design, integration, and test, along with modeling and simulation, algorithm development, coding, and testing. The ADCS design and its supporting GSE derive strong heritage from the *Clementine*, NEMO, and various classified programs. Foldout 3, Table A identifies the master equipment list, component heritage, and a planned qualification approach for each item.

4.3.3 Electrical Power Subsystem. EPS provides power to all S/C loads for the baseline and extended missions. EPS performs the following functions: energy generation and storage; battery charge control and energy management; S/C electrical load distribution and protection; control for solar trim tab and trim mass motors; and ordnance release of S/A panels, omnidirectional antennas, AKM firing, and for the spent AKM casing. Figure 4-9 provides a top-level EPS block diagram.

4.3.3.1 Characteristics and Requirements.

❒ *Energy Generation:* Six S/A panels generate energy for the S/C in sunlight during the post launch, GTO, and operational mission phases. The panels are stored in accordion fashion for launch. After deployment, the panels are oriented 45˚ toward the Sun. Each panel uses 228 high-efficiency tandem solar cells (GaInP/GaAs/Ge), arranged in 12 series strings, with 19 cells per string. The panels are sized to support the GEO/Ops power requirements. This design produces 552 W (BOL) and 485 W (EOL). The EOL power includes the

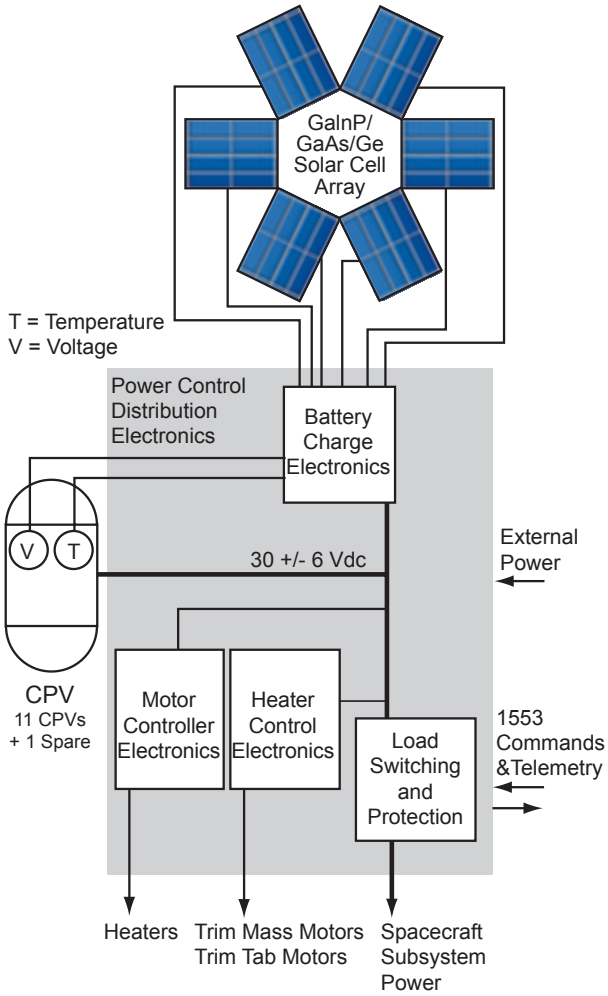

Figure 4-9. EPS Block Diagram

degradation effects of charged particle radiation (2.5 year exposure), a 45˚ cosine loss, and a 120˚C operating temperature. The additional charged particle degradation accumulated from 2.5 years to 5 years is negligible. At 5 years the array will produce >470 W.

❒ *Energy Storage:* The S/C is powered during eclipse periods by a NiH_2 battery comprised of eleven Common Pressure Vessel (CPV) cells collectively producing an output voltage of 30 ±6 Vdc. Each CPV has a capacity of 25 Ah. A spare CPV provides limited redundancy should one of the battery's CPVs fail. The PCDE contains circuitry to trickle-charge the spare CPV and a relay to switch it into the battery if required. Each CPV has a diode bypass network to bypass an open-circuit CPV during charge or discharge without interfering with the operation of other cells. The battery supports maximum GEO eclipses with a Depth of Discharge (DOD) of <80% (see Figure 4-10 and Table 4-14). The battery is similar to those used on the Mars Global Surveyor. The mounting structure for the battery (NRL design) will maintain the individual pressure vessels at 1˚C (worst case) over all cells.

❒ *Battery Charging, Energy Management, Load Distribution, and Motor Control*: This subsystem functionality is implemented in a Power Control and Distribution Electronics (PCDE) box. It accepts power from the S/A panels, regulates the battery charge, controls the motors for the solar shield trim tabs and trim masses, and distributes power to S/C subsystem loads. The PCDE reuses the heritage *Clementine* design. The design uses a single circuit card assembly (CCA) that includes the Battery Charge Electronics (BCE). For FAME the CCA is updated to include a MIL-STD-1553 data bus I/F, and motor controller circuitry. Solar cell string groupings that are electrically connected in parallel are routed through FET switches in the PCDE. The BCE controls these FET switches and provides non-dissipative regulation of the S/A current to support battery charge and S/C load requirements. Charge control uses Voltage Temperature (VT) compensation curves. Non-critical S/C loads are connected to the power bus through relay switches and have in-line over-current protection. Critical S/C loads are permanently connected to the S/C bus with in-line over-current protection. The PCDE uses non-intrusive current monitors for the total S/A and load currents. Current monitors for the battery charge/discharge current and individual loads are provided.

Ordnance Control: This subsystem functionality is implemented in an Ordnance Control Box (OCB) shown in Figure 4-11. It controls the firing circuitry to deploy the S/A mechanisms, fire the AKM, and fire the AKM casing separation mechanisms. The OCB reuses a *Clementine* heritage design, and performs nearly identical functions. Existing ordnance GSE is available for FAME. The *Clementine* design, along with its supporting GSE, was approved by the VAFB Range Safety Office.

4.3.3.2 Cost-Reduction Design Features.

❒ *NiH_2 Batteries:* Individual Common Pressure Vessel (CPV) batteries will be procured from the

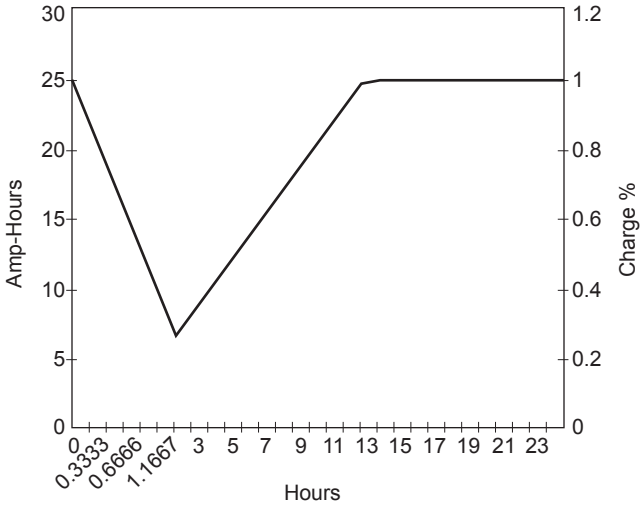

Figure 4-10. Battery Depth of Discharge

Table 4-14. Average Power (Watts)

Subsystem/Unit	Qty	Launch	Initial Acq/ GTO	GEO/ Ops	Safe/ Hold Mode
CT&DH	1	24.1	36.5	24.1	24.1
ADCS					
▪ IMU	2	0	20	10	10
▪ Sun Sensor & Elect.	1	1	1	1	1
▪ Star Tracker	2	0	20	10	0
RF Subsystem					
▪ Receiver	2	7.6	7.6	7.6	7.6
▪ Transmitter	2	0	24	24	24
▪ Power Amplifier	2	0	0	58	0
Mechanisms					
▪ S/A Trim Tabs	6	0	0	0	0
▪ Trim Mass Motors	6	0	0	0	0
EPS					
▪ PCDU	1	15	15	15	15
▪ Battery	1	0	0	0	0
S/C Heater Power		0	57.5	23.5	90.5
Instrument					
▪ Electronics		0	0	99	0
▪ Operational Heater		0	0	80	0
▪ Survival Heater Feed		0	20	0	60
Subtotal By Operational Phase		47.7	201.6	352.2	232.2
(50% Instrument Margin)		0.0	10.0	89.5	30.0
(25% Design Margin)		11.9	45.4	43.3	43.1
Totals w/ Margins		59.7	257.0	485.0	305.3

vendor rather than a packaged 11 cell battery. NRL will endeavor to package the CPVs using the same approach as the *Clementine* SPV battery. The design will ensure that the temperature of the individual CPVs stay within 1°C. The *Clementine* battery packaging design used a highly thermal conductive graphite epoxy structure that achieved lower mass, better thermal conductivity, and lower cost than the vendor's OTS packaging design.

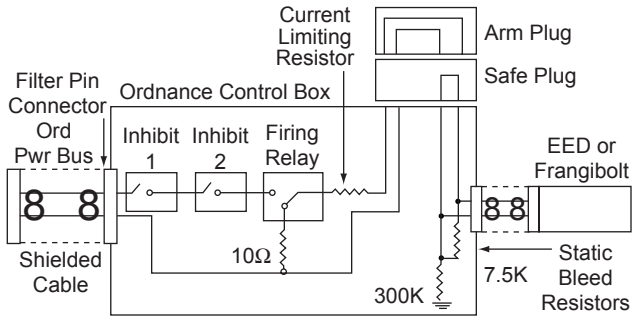

Figure 4-11. OCB Block Diagram

❒ *Lithium Ion Battery:* Recent data indicate that Lithium Ion battery cell technology has demonstrated the cycle life requirements for the FAME GEO mission. Li-Ion has 3 times the specific energy (Wh/kg) of nickel hydrogen battery cells. Replacing the NiH_2 battery with Li-Ion cells reduces the mass of the FAME battery system by 40%. Each Li-Ion cell has a nominal voltage of 3.5 V so that the number of cells required is less than half those required for the NiH_2 battery. NRL is testing Li-Ion cells as part of the joint AFRL-NASA Li-Ion consortium. NRL may be able to leverage their participation in this program and acquire state of the art Li-Ion cells for FAME flight battery use. This will be an area of study during Phase B.

❒ *S/A Sizing:* Sizing of the S/A panels to support the initial acquisition and GTO power requirements requires twice the number of solar cells as needed when on-orbit. While there is sufficient area on each panel to apply these cells, there may be other mass and cost efficient alternatives. This is an area of study during Phase B.

4.3.3.3 Resource Margins and Reserves. Table 4-14 identifies the average power required by each subsystem or major component, along with the 25% design margin that was applied.

4.3.3.4 Master Equipment List. All power electronics (PCDE, OCB) are designed and fabricated in-house at NRL. The S/A substrates are designed at NRL with subcontracted fabrication. The CPV battery cells are a build-to-print subcontract. Solar cell fabrication and laydown is subcontracted.

NRL performs subsystem design, integration, and test. All EPS designs, along with it supporting GSE, derive strong heritage from the *Clementine* and ICM programs. Foldout 3, Table A identifies the master equipment list, component heritage, and a planned qualification approach.

4.3.4 RF Telecommunications. The RF telecom subsystem is required to provide a continuous 409.6 kb/s wideband downlink and 2 kb/s uplink for the mission. The data are transmitted to an 11.3 m antenna system at BP. The RF Telecom subsystem provides the capability for simultaneous S-Band uplink and downlink (wideband and narrowband), and range/range-rate tracking. It is fully compatible with NASA ground stations. This subsystem accommodates the S/C requirements during launch and GTO injection with the attached AKM, while supporting the operational phases after AKM separation and after the S/A/solar shield are deployed. Figure 4-12 shows the block diagram of this subsystem.

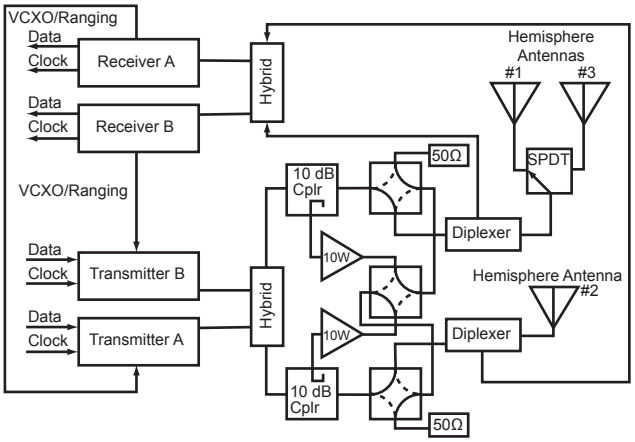

Figure 4-12. RF Telecom Block Diagram

4.3.4.1 Characteristics and Requirements.

❒ *Transponders:* We baselined a redundant uplink receiver and downlink transmitter packaged into two transponders, each with an output power of two Watts and a minimum sensitivity of -118 dBm at 10^{-6} Bit Error Rate. Each transponder can be configured to operate in a coherent mode. The received uplink carrier is used to generate the downlink carrier at a 240/221 fixed ratio to allow range-rate measurement at the ground site. If no uplink carrier is present, an oscillator in the transmitter generates the downlink frequency. The receiver's demodulated output is also routed to the transmitter to support range measurements. The wideband data rate is 409.6 kb/s encoded with a Reed-Solomon (255,223) outer code, interleaved to a depth 5 and then convolutionally encoded with a K=7, R=1/2 inner code using CCSDS conventions. These symbols are BPSK modulated onto the downlink carrier. During launch and GTO injection, the antennas cannot support the wideband data rate, and so a narrowband data rate (800 b/s) is used. These data are encoded in the same manner as the wideband data and BPSK modulated as a Bi-phase (Manchester) format onto a 1.7 MHz subcarrier used to modulate the carrier at a modulation index of 1.4 radians (peak). The transponders are nearly identical to those used on *Clementine* (L3 Comm, Inc., P/N CXS-600B). The transponders use 10 watt Solid State Power Amplifiers (SSPA) for power amplification in the wideband mode. These SSPAs (L3 Comm Inc.) are used on NRL's ICM program. Minor modifications to the transponders and SSPAs are required to lower the RF output power.

❒ *Downlink Connectivity:* Three separate antennas are baselined (see Foldout 2, Figures D and E). During launch and GTO injection, two antennas produce omnidirectional coverage about the S/C spin axis. After the AKM separates from the S/C, one antenna deploys and orients along the spin axis for use with the third antenna mounted on the Instrument. To maintain adequate link margins, each SSPA can be switched to transmit based on ground station line-of-sight (LOS) viewing. If an SSPA fails, a transfer switch must be cycled twice per day (less than 4000 times over a 5-year period). If no components fail, the SPDT and transfer switches will be cycled only one time. The SPDT and transfer switches are designed for 100,000 life cycles.

❒ *Uplink Connectivity:* The S/C command receivers are always connected to an array of two antennas through the diplexers in both antenna configurations. The 90-degree hybrid connecting the command receivers to the array precludes an antenna pattern interference null on both receivers at the same time, while the conservative Telecom subsystem design permits reliable receiver operation with antenna gains as low as -20 dBi.

❒ *Antenna Design:* The antennas are a quadrifilar helix design mounted over an 20.32 cm ground

plane. The antennas are nearly identical to those used in ICM with minor modifications for sense of circular polarization. A single antenna pattern is shown in Figure 4-13. Antenna gain over the hemisphere ranges from -1 dBi to 4 dBi. When two antennas on opposite S/C sides are arrayed, interference nulls are generated, and a minimum antenna gain of -18 dBi over ~99% of the sphere is assumed in the narrowband downlink mode.

❒ *Supporting RF Hardware:* Other hardware used on the program includes diplexers, hybrid power dividers, and transfer switches, all of which have heritage from ICM. The 10dB couplers and 50 ohm loads were used on *Clementine*. The SPDT switch was spaceflight-qualified on the *Meteosat* and *Sicral* programs.

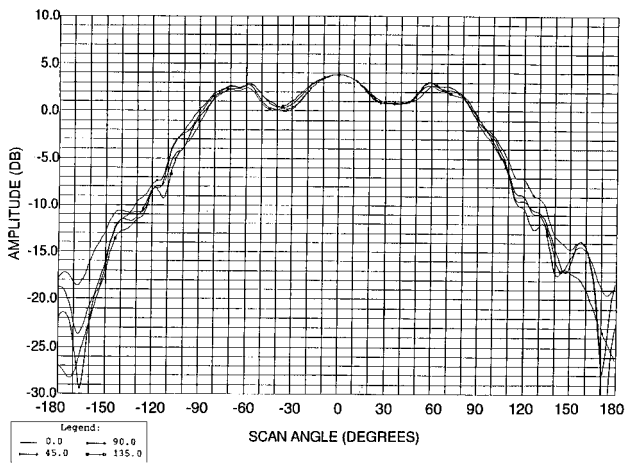

Figure 4-13. Antenna Pattern

4.3.4.2 Cost-Reduction Design Features. The RF telecom subsystem design allows one transponder to be removed. Fifty-ohm terminations would then be added to each of the hybrid power dividers. This reduces the total cost of the RF telecom subsystem; however, the reliability is reduced. A further cost reduction could be realized by eliminating one of the SSPAs and some of the associated switching. This further reduces reliability.

4.3.4.3 Resource Margins and Reserves. Link budgets for the uplink, wideband data downlink and narrowband data downlink are shown in Foldout 5, Tables A through C.

4.3.4.4 Master Equipment List. The transponder, the SSPA, and the supporting RF hardware, along with all cabling, are procured from the vendors identified in Foldout 3, Table A. The antennas are designed and fabricated in-house at NRL. NRL performs subsystem design, integration, and test. All RF Telecom design, along with their supporting GSE, derive strong heritage from the *Clementine* and ICM programs. Foldout 3, Table A identifies the master equipment list, component heritage, and a planned qualification approach for each item.

4.3.5 Command, Telemetry, and Data Handling Subsystem. The CT&DH subsystem uses a highly Integrated S/C Controller (ISC) based on *Clementine's* DSC architecture. Our approach contains the risk by using selective design upgrades with proven COTS products. Additionally, we added redundancy in the Uplink/Downlink Module (UDM), the ACS/RCS (ARC) Module, Power Converters and the Ovenized Crystal Oscillators. Full redundancy was not employed because of the cost associated with the RAD6000 processors. The ISC is a lightweight, ruggedized, and integrated subassembly with electronics modules evolved from *Clementine* and MPTB (see Table 4-15). Figure 4-14 provides a top-level block diagram. ISC functions include: Telemetry and Command Processing (Uplink and Stored); Instrument control; S/C Attitude Determination and Control; Mission data collection, storage, formatting, and downlink; Time distribution; Power conversion; and Autonomous fault protection.

4.3.5.1 Characteristics and Requirements.

❒ *General Subsystem Requirements:* The ISC must provide the capability to decode and process CCSDS commands received via the uplink, as well as those stored onboard. Critical commands must be executed without CPU interaction. The uplink must be able to support a nominal rate of 2 kb/s. Downlinked telemetry frames must be CCSDS compatible and support variable rates from 409.6 kb/s to 800 b/s. Science data must be collected at the instrument's maximum rate (~2 Mb/s), and stored, buffered, and downlinked at a maximum rate of 409.6 kb/s. The recorder must have a FIFO capability. Critical S/C and instrument temperature and power information must be monitored, collected, and downlinked. Wideband data must be stored during annual Sun-to-Ground antenna interference outages (at GEO, interference conditions occur twice per year with a maximum duration of 36 minutes per occurrence). Wideband and narrow-

band data interleaving must be supported. Universal time must be distributed to within 1 msec accuracy. ISC must communicate and control ADCS, EPS, and Instrument subsystems.

❒ *Telemetry and Command Processing (Uplinked and Stored):* The UDM I/Fs to the S/C's transponders and provides for 2 channels each of up to 409.6 kb/s downlink and 2 kb/s uplink. The UDM is selectively redundant with a separate data processing segment for each of the two transponders. A radiation-hardened 80C51 micro-controller manages uplink and downlink data. Command and telemetry are in CCSDS format and the telemetry data are encoded with a Reed-Solomon (255,223) outer code, interleaved to a depth 5 and then convolutionally encoded with a K=5, R=1/2 inner code. Downlink rates of 409.6, 204.8, 51.2, 6.4, 1.6, and 0.8 kb/s are supported. The redundant micro-controller uses the Intel 8051 core manufactured by UTMC. All hardware is radiation-tolerant and SEU immune. The micro-controller S/W is implemented using trusted S/W design criteria. Data to and from the UDM are passed by the CPU via the VME bus through a shared memory structure. This I/F design shares common components with the ARC Module. The UDM supports sixteen analog telemetry channels and sixteen critical relay I/Fs. Functions deemed crucial to mission survival are monitored and provide for direct control. Commands for critical I/Fs are received and implemented by the UDM without interaction by the CPU. NRL has extensive experience with the 80C51, having flown it on both the Sodium Sulfur Battery Experiment (Shuttle Mission) and MPTB. The MPTB, controlled by four radiation-hardened UTMC 80C51 microcontrollers, has operated since November 1997 in a high radiation elliptical orbit.

❒ *Spacecraft Input/Output Module:* The S/C I/O Module (SCIO) provides control and telemetry I/Fs for the S/C subsystems. Our Design Reference Mission for the SCIO module supports the I/Fs defined in Table 4-3. Commands and Telemetry are directly addressed through VME bus and accessed by the CPU. This circuitry duplicates that flown on *Clementine* with modifications for VME bus control.

❒ *Attitude and Reaction Control Module:* The ARC module receives position, velocity and acceleration data from the Sun sensor and IMUs via dedicated I/Fs. S/C Sun angle and rate/acceleration data are passed to the CPU for guidance and/or thruster calculations. Thruster control commands are sent from the CPU to the ARC module, where they are authenticated before being executed (a "lesson learned" from *Clementine*). The ARC module independently monitors the Sun angle and vehicle rate information to determine whether to initiate safe/hold mode. It uses selective redundancy and supports redundant IMUs. It is based on the Intel 8051 core used in the UDM, and all hardware is radiation-tolerant and SEU immune. Micro-controller S/W is implemented using trusted S/W design criteria. Data to and from the ARC module

Table 4-15. Integrated S/C Controller Modules

Module	Functions	Heritage	Modifications
CPU	RAD6000 32 bit RISC Processor	Mars Surveyor, EOS	None
S/C I/O (SCIO)	Command & Telemetry	Clementine	Repackage with VME I/F
Uplink Downlink Module (UDM)	Critical & Normal CMD Processing TLM Processing & Formatting	Clementine MPTB	Integrate MPTB Controller (UTMC8051) w/Clementine I/Fs
ACS & RCS (ARC).	I/F w/ Valves, Paraffin Actuators, IMU, Sun Sensors & Transducers	Clementine MPTB	Integrate MPTB Controller w/Clementine I/F H/W
Data Recorder & I/F (DRIM)	Wideband Data I/F & Storage MIL-STD-1553 Bus	STEX ICM	New Module w/ Heritage Components
Power Cvtr. & Timing (PCT)	S/C Power Conversion, OCXO & Clock Distribution	MPTB, EOS, Orbcomm	Repackage Flight Components

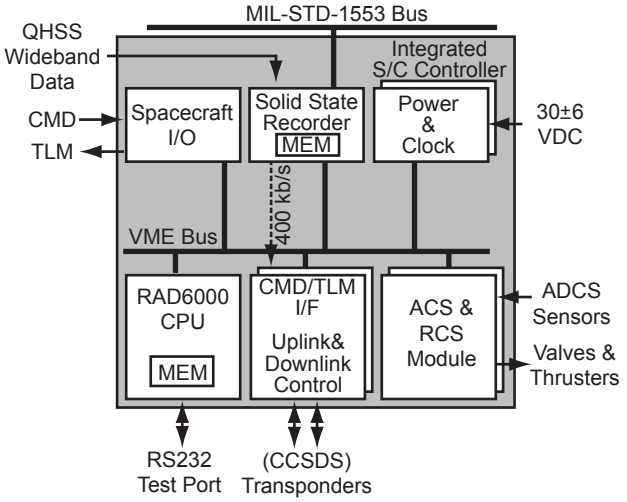

Figure 4-14. ISC Block Diagram

are passed by the CPU via the VME bus through a shared memory structure. ARC controllers perform basic limit checks and limit thruster burn times to improve reliability. Violations in pre-configured limits cause the safe-hold mode to be executed.

❒ *ADCS and General Purpose Processing*: The LMFS RAD6000 radiation-hardened RISC processor is the ISC CPU. It provides a maximum processing throughput of 21 MIPS at 20 MHz and contains 128 Mbytes of DRAM with single bit error correction and double bit error detection. There are 3 Mbytes of EEPROM for program storage with a serial I/F port for FSW development. The CPU operates at 20 MHz (maximum), but can operate at 10, 5, and 2.5 MHz to save power. It is the Slot 1 (Host) VME controller supporting bus mastering and direct memory access (DMA). The CPU, packaged as a 6U VME card, is a duplicate of the Mars Surveyor CPU.

❒ *Data Recorder and I/F Module*: The DRIM uses solid state memory with 4 Gigabit EOL storage capacity, a Bus Controller MIL-STD-1553 I/F and a Quad High Speed Serial (QHSS) I/F to collect instrument data and telemetry. The CPU communicates with the star trackers, instrument controllers, and S/C PCDE via the MIL-STD-1553 bus. Instrument mission data are collected via the QHSS and stored for downlink in the data recorder DRAMs. Memory is sized to store at least 1 hour (with 100% margin) of average rate science data. Science data can be buffered when the instrument scans the galactic plane and when communications are lost during annual Sun-to-Ground antenna interference outages. The data recorder is based on commercial technology 64-Megabit DRAMs with single bit error correction and double bit error detection. The architecture allows the memory to be formatted to ignore bad blocks. A FIFO DMA access controller provides high-speed memory access with minimal processor interaction in addition to direct address access for testing and error scrubbing. The FIFO data output to UDM can be "turned off" for planned Ground System outages to allow buffering and onboard storage. The 64-Megabit DRAMs were successfully demonstrated in space applications (STEX). The MIL-STD-1553 controller is packaged in an MCM containing the protocol engine, storage memory and transceiver. It is capable of both Bus Controller and Remote Terminal functionality. Direct and Stub couplings allow a bus monitor to be used during test and integration. The radiation-hardened controller has spaceflight history. The QHSS I/F uses a LMFS standard design to I/F with the instrument. The QHSS I/F collects instrument data and telemetry and routes it to the on-board DRAM FIFO. The QHSS has flight history on previous NASA missions, and it is directly implemented from the original design.

❒ *Power Converter and Time Distribution*: The PCT module contains the redundant voltage converters for the ISC, and redundant master clock oscillators. Redundant converters using diode switchover provide high reliability and fault tolerance. Heritage COTS converter designs (e.g., MDI, Interpoint) yield >70% conversion efficiency with radiation tolerance and SEU immunity. Redundant oven controlled crystal oscillators (OCXOs) provide S/C bus timing. The S/C bus time must be kept within 1 msec of actual time. The DATUM 9600 OCXO (Orbcomm, MTSat, and EOS) provides a drift of 40 μsec per day, which meets the requirement. (Note: The instrument contains independent oscillators for star observations.)

❒ *Autonomous Fault Protection:* The ISC supports autonomous operations implemented in both hardware and S/W. Specific examples include SEU recovery, and rule-based responses to monitored current or voltage conditions.

4.3.5.2 Cost-Reduction Design Features. Existing designs and standard I/Fs are reused to reduce program risk. This minimizes unit development risk and system level risk during integration with the instrument and S/C subsystems. By choosing the VME based RAD6000, project risk is minimized because multiple units have been produced and many hours have been invested in finding "design features". Additionally, the standard VME I/F simplifies the development of the other ISC modules. The MIL-STD-1553 bus I/F reduces integration risk by using a well known standard. The QHSS I/F further simplifies instrument integration by using a standard protocol for transmitting high-rate variable speed data. This I/F is well known to the instrument team and greatly reduces the integration time and complexity. Reuse of existing *Clementine* and MPTB designs reduces

the development risk associated with complex S/C design. Extensive analyses, proven by flight experience, exists for these hardware designs.

4.3.5.3 Resource Margins and Reserves. Table 4-16 lists general C&T support resources. Resource margins and reserves for the processors, memory, and EEPROM are provided in the FSW discussion of Section 4.3.2.3.

4.3.5.4 Master Equipment List. The ISC is contained in an aluminum enclosure with 1.52 mm thick side walls and 2.54 mm thick baseplate to meet the mission goals (thermal, mechanical) and life expectancy (radiation shielding). The six modules are connected by a Printed Circuit Board (PCB) backplane meeting VME standards. The RAD6000 is procured via subcontract from LMFS. The modules, the enclosure, and the supporting hardware are designed and fabricated in-house at NRL. NRL performs subsystem design, integration, and test. All ISC designs, and its supporting GSE, derive strong heritage from the *Clementine* and MPTB programs. Table 4-17 lists ISC mass and power.

4.3.6 Flight Software. The FSW architecture is derived from heritage systems designed by NRL. Table 4-19 describes the FSW reuse as a function of the processor and identified task. Substantial reuse is planned. Figure 4-15 shows the baseline FSW and GSW architecture, roles, and responsibilities, and its relationship to the development environment. GSW and the instrument's SW are discussed in Sections 4.7.10 and 4.4.5.1, respectively.

4.3.6.1 Characteristics and Requirements. FSW is resident across three ISC modules; a main CPU and microcontroller based ACS/RCS and uplink/downlink modules. The main CPU, a RAD6000 processor, executes the majority of the FSW. Auxiliary FSW resides on the 80C51 processors resident on the ARC and UDM modules, relieving the main CPU of low-level hardware management tasks. FSW hosted on the RAD-6000 CPU's S/W is divided into five functional areas:

a. *Resource Manager:* Provides boot processing, task management, memory management, timer services, inter-task communications, MIL-STD-1553 bus control, SSR management, diagnostic and logging services, and interrupt handling services for higher level processes.

Table 4-16. SCIO CMD and TLM Resources

Resource	Capability
Relay Commands	48
Active Analog Monitors for V & I	48
Passive Analog Monitors for Thermistors	64
Relay Position Indicators	24

Table 4-17. ISC Module Mass and Power

Module	Mass (kg)	Power (W) in Mode	
		Low Power	Ops
CPU	1.18	3.3	13.2
S/C I/O	0.57	2	2
Uplink/Downlink	0.57	4	4
ACS/RCS (ARC)	0.57	4	4
Data Recorder and I/F	0.57	5	5
Power Convertor and Time (25%)	1.25	5.8	8.3
Backplane and Enclosure	2.12	0	0
Total	**6.83**	**24.1**	**36.5**

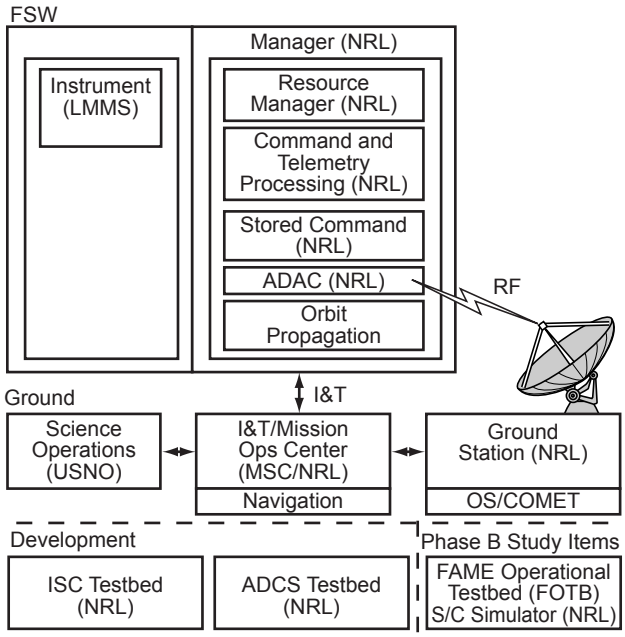

Figure 4-15. Baseline S/W Architecture

b. *Telemetry and Command Processing:* Decodes uplinked commands and data loads and distributes them to the appropriate S/W process or hardware entity. Gathers telemetry using an uploaded commutation format and distributes it to the onboard telemetry database, the onboard storage device, the Uplink/Downlink I/F, or any combination thereof.

c. *Stored Commanding:* A COTS implementation of Spacecraft Command Language (SCL),

used on *Clementine* and FUSE, provides procedural scripts and the capability to respond autonomously via rule-based mechanisms to asynchronous events. Scripts and rules tasking the S/C are generated on the ground, compiled into tokens by SCL's compiler, formatted and uplinked, and stored onboard for subsequent execution. Script execution time can be absolute or relative.

d. *Attitude Determination and Control:* Consists of the GNC executive controlling S/C modes and allowable commands. ADAC generates commanded attitude and updates the S/C's inertial properties. ADCS passes data to and processes data from the IMUs and STs. It manages spin rate, precession, and nutation during spin-stabilized flight; and controls thruster firing.

e. *Orbit Propagation:* Accepts state vectors from the ground and propagates the S/C orbit over time. Delivers the current S/C position to ongoing S/W processes.

❒ *8051 Microcontrollers:* These hardware controllers relieve the main CPU from the burden of managing UDM and ARC I/Fs. The 8051 microcontroller consists of an RTX51 and two higher level tasks. The design of the two modules is virtually identical (see Table 4-18). NRL has extensive experience with the 8051 (NASB & MPTB). The RTX51 RTOS was used on both systems and provides a small, efficient, runtime kernel.

❒ *Software Configuration Management and Documentation:* All FSW within the three processors is placed under CM beginning with an initial capability build. The CM system supports multiple S/W versions and facilitates concurrent baselines for the development, integration, and test teams. Additionally, branches and problem reports can be addressed at different baselines, allowing problem resolution at the baseline level. Documentation consists of a S/W Development Plan, S/W Product Specification (SPS), and S/W Test Plan (STP) for each of the Computer S/W Configuration Items (CSCI). The SPS includes the CSCI requirements, input/output I/Fs, a basic design description, and source code. The STP include the test methodology for the CSCI and any external equipment/simulations necessary for testing.

4.3.6.2 Cost-Reduction Design Features. We baselined substantial FSW reuse to reduce cost and mitigate developmental risk. Table 4-19 provides data on the heritage of the FSW.

Table 4-18. Microcontroller Functionality

Module	Task
Uplink and Downlink (UDM)	▪ Uplink Task: Validates command formats, and passes the commands on to the main CPU for execution or storage ▪ Downlink Task: Accepts a downlink stream from the main CPU, formats it, and supplies the data to the downlink at the selected rate.
ACS/RCS Control Electronics (ACE)	▪ Thruster Management Task: Accepts specific commands from the main CPU and manages the thruster's hardware I/F. It rejects invalid ADCS commands and returns an error code to the main CPU. ▪ Sensor Management Task: Receives data from the IMU and the Sun Sensors and passes it on to the main CPU for processing

Table 4-19. FSW Reuse

CPU	Task	Previous Use	Comments
RAD6000	Bus Control Manager	Advanced S/C Controller (ASC), NEMO	▪ NRL developed '1553 BC & RT for multiple DoD Avionics Programs
	TM Formatter	Clementine, NEMO and ICM	▪ GNC "spin" mode demonstrated on Clementine; FAME S/W is very similar, & much of the S/W is reused
	GNC & ADAC		
	Orbit Propagator	Clementine, NEMO	▪ Extensively used on Clementine w/ little change for FAME
	Payload Event Table	NEMO	
	HW Mgr. & Data Recorder Mgr.		
	SCL (RTE & Data IO)	Clementine, NEMO, ICM, FUSE	▪ Proven COTS resource
UDM & ARC Microcontroller	RTX51 OS	MPTB	▪ Adapted from MPTB usage on 8051 ▪ New Development for FAME's 8051 Usage ▪ Similar Clementine S/W is being adapted for standalone use
	U/L Manager & D/L Manager		
	Thruster Management		

4.3.6.3 Resource Margins and Reserves.

❒ *RAD6000 CPU:* The estimated processing requirements are shown in Table 4-20. Its RAM and EEPROM requirements are shown in Tables 4-21 and 4-22, respectively.

❒ *UDM Microcontroller:* The estimated RAM and EEPROM requirements are shown in Tables 4-23 and 4-24, respectively. Note: The required 100% RAM margin is not met for this processor. This system closely resembles the MPTB Core Electronics Unit, which is the source for the size estimate. Because of the similarity to this existing system, the indicated margin will be sufficient.

❒ *ACS/RCS Module Microcontroller:* Estimated RAM and EEPROM requirements are shown in Tables 4-25 and 4-26, respectively.

Table 4-20. CPU Processing Requirements

Function	Ops	Rate (Hz)	MIPS
Timer	4000	100	0.4
BC Manager	25000	20	0.5
GNC Exec	1000000	1	1.0
ADAC	750000	4	3.0
Orbit Propagator (RT)	1000000	1	1.0
TM Formatter	20000	50	1.0
P/L Event Table Proc	20000	20	0.4
HW Manager	40000	1	0.0
SSDR Manager	40000	10	0.4
SCL Data I/O	24000	25	0.6
SCL RTE	32000	25	0.8
Total			9.1
Available			20.0
Margin			**119%**

Table 4-21. CPU RAM Requirements (kb)

Software Component	Code	Data	Total
Resource Manager			
▪ RTOS	256	256	512
▪ Drivers and ISRs	16	64	80
▪ Resource Management	64	96	160
Command and Telemetry			
▪ Bus Controller	6	4	10
▪ TLM Formatter	12	32	44
▪ SCL RTE/Data I/O	112	24	136
▪ SSDR Manager	4	1	5
Guidance, Navigation, and Control			
▪ GNC Total	87	32	119
Data Structures			
▪ SSDR Load Buffers	0	1088	1088
▪ Command History	0	32	32
▪ Onboard Database (Scripts & TLM)	0	640	640
▪ GNC Tables		1,152	1152
FSW Total K Bytes Required			3978
Total Available			128,000
Margin			**3,100%**

4.3.7 Thermal Control Subsystem. The simple and robust thermal design uses no louvers or heat-pipes, and relatively little heater power. It uses an electro-static discharge (ESD) mitigating coating on the MLI's external surfaces to allow complete MLI grounding. All thermal hardware meets FAME's cleanliness requirements. Figure 4-16 shows the planned thermal design concept.

4.3.7.1 Characteristics and Requirements.

❒ *General Requirements:* Table 4-27 lists the S/C component temperature requirements for the Design Reference Mission. All measurements of electronics units are at the enclosure baseplate. Because hydrazine propellant freezes at 1.5°C, all

Table 4-22. CPU EEPROM Rqmts (kb)

Software Component	Code
Resource Manager	
▪ RTOS	256
▪ Drivers & ISRs	16
▪ Resource Mgr	64
Command and Telemetry	
▪ Bus Controller	6
▪ TM Formatter	12
▪ SCL RTE/Data I/O	112
▪ SSR Manager	4
Guidance, Navigation, and Control	
GNC Total	87
Data Structures:	
▪ SSDR Load Buffers	0
▪ Command History	0
▪ Onboard Database, Scripts & TLM	0
▪ GNC Tables	1,114
FSW Total K Bytes Required	1,114
Total Available	3,000
Margin With 3Meg of EEPROM	**169%**

Table 4-23. UDM Cntrl. RAM Rqmts (kb)

Software Component	Code	Data	Total
Resource Manager			
RTOS	5	4	9
Drivers & ISRs	4	4	8
Command & Telemetry Processing:			
Uplink Handling	4	6	10
Downlink Formatting	4	12	16
Rate Management	4	2	6
FSW Total K Bytes Required			49
Total Available			64
Margin			**31%**

Table 4-24. UDM Cntrl. EEPROM Rqmts (kb)

Software Component	Code
Resource Manager	
RTOS	5
Drivers & ISRs	4
Command & Telemetry Processing:	
Uplink Handling	4
Downlink Formatting	4
Rate Management	4
FSW Total K Bytes Required	21
Total Available	64
Margin	**205%**

Table 4-25. ADCS Cntrl. RAM Rqmts (kb)

Software Component	Code	Data	Total
Resource Manager			
RTOS	5	4	9
Drivers & ISRs	4	4	8
Guidance, Navigation, and Control			
IMU Processing	4	6	10
Thruster Management	4	2	6
FSW Total K Bytes Required			33
Total Available			64
Margin With 64K of RAM			**94%**

Table 4-26. ADCS Cntrl. EEPROM Rqmts (kb)

Software Component	Code
Resource Manager	
RTOS	5
Drivers & ISRs	4
Guidance, Navigation, and Control	
IMU Processing	4
Thruster Management	4
FSW Total K Bytes Required	17
Total Available	64
Margin With 64K of EEPROM	**276%**

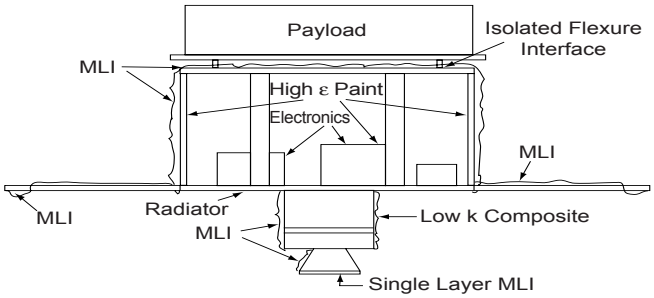

Figure 4-16. TCS Design Approach

"wetted" components are maintained above 5°C. On the structure, flexure I/Fs connected to the Instrument are maintained at 20±2°C to minimize heat leak variations to the Instrument. The AKM's operational maximum temperature is the hottest local temperature anticipated on the motor casing. Table 4-28 summarizes subsystem power dissipations in various mission modes. The CPV battery is not included in the EPS dissipation. Note that the battery dissipates a negligible amount of heat during charge, but the dissipation can be as high as 25% of the discharge power. Heater power is required during all mission phases. Table 4-28 summarizes the heater power requirements. The Comm subsystem requires a heater during the acquisition, stowed array, and safe/hold modes to

Table 4-27. Component Temperature Rqmts.

Component	Design Requirements			
	Operational (°C)		Non-Op (°C)	
	Min	Max	Min	Max
CT&DH Electronics	0	40	-20	60
ADCS:				
▪ IMU	0	40	-20	60
▪ Sun Sensor & Electronics	0	40	-20	60
▪ Star Tracker Camera	0	40	-20	60
▪ Thruster Valves	5	40	5	55
▪ Propellant Tank & Lines	5	40	5	55
RF Telecommunications				
▪ Receiver	0	40	-20	60
▪ Transmitter	0	40	-20	60
▪ Power Amplifiers	0	40	-20	60
Electrical Power Subsystem				
▪ PCDU	0	40	-20	60
▪ Battery	-10	20	N/A	N/A
Structure				
▪ Instrument Mount I/Fs	18	22	N/A	N/A
AKM	N/A	371	0	43
Ordnance	0	40	-20	60

Table 4-28. Heater Power Requirements

Subsystem/ Component	Launch (W)	Stowed S/A (W)	Nominal Operation (W)	Safe/Hold, Survival (W)
CT&DH	0.0	0.0	0.0	0.0
RF Telecomm	0.0	22.5	0.0	30.0
EPS	0.0	11.0	8.5	20.0
ADCS	0.0	15.0	9.0	26.5
Instrument I/F	0.0	9.0	6.0	14.0
Mode Totals	0	57.5	23.5	90.5

maintain the SSPA above its non-operational temperature limit. The EPS heater is required only for the battery. The ACS heater requirement includes propellant tank, lines, thruster valve heaters, IMU, star trackers, and Sun sensor and its electronics.

❒ *Heat Transfer:* Exterior shear panel surfaces are covered with MLI to prevent thermal emission induced perturbations. Internal surfaces are coated with high ε black paint. The top panel's exterior surface (Instrument support panel) is covered with MLI to minimize radiation heat exchange with the Instrument. The dissipating electronics and the battery assembly are mounted on the bottom panel's internal surface. The propellant tank, lines, and thruster valves are covered with MLI. The S/A panel backsides are covered with MLI to minimize radiation heat leak into the Instrument. Because

the battery requires colder temperatures than the other electronics, it is covered with MLI to minimize radiation heat exchange with other components. It is also mounted away from other components to minimize heat leak into the battery due to lateral conductance through the panel facesheets. Except for the battery, the electronics box and internal deck surfaces are painted black. All components use a silicone-based RTV thermal material at the panel I/F. The external deck surface is used as the radiator.

❒ *Thermal Control Devices:* To maintain minimum temperature, thermostatically controlled heater circuits are applied to the internal panel facesheet. All heater circuits are redundant with series/parallel thermostats. Required total heater power is determined at the worst case cold conditions (beta angle, component dissipation, fluxes). To avoid rapid thermal cycling, setpoints are maintained at least 15˚C apart. Heater power is distributed among six separate circuits activated at different setpoints to enable gradual temperature changes. At predetermined set points, thermostats close to supply incremental heater power to the electronics panel. Thermostatically controlled heater circuits are provided for the propellant tank, lines, and thruster valves. Because these components have minimal impact on the structure temperature, standard narrow band thermostats are used. Solid state thermostatically controlled heaters are provided at the top panel I/F to the Instrument (at the flexure) to maintain 20±2˚C. These thermostats sense the resistance of a platinum resistance thermometer attached to the I/F points and autonomously close/open a relay circuit in series to the heaters.

❒ *AKM Thermal Design:* The AKM's thermal design is totally passive. Only MLI maintains propellant temperatures before firing and protects the S/C from high temperatures during firing. High temperature MLI lining is placed on the internal AKM support structure surface around the AKM (but is not attached to it). The MLI insulates the bus from the hot AKM during firing and heat soakback. After AKM jettison, the MLI protects the bus from heating due to "capture" of the solar flux inside the now empty cavity. A separate piece of high temperature MLI covers the exposed (to space) AKM section to prevent the motor from getting too cold before firing. Several layers of stainless steel sheets, separated by fiberglass scrim, insulate the AKM nozzle, and a single layer of aluminized polymide film covers the nozzle exit plane to prevent heat loss before firing. The nozzle exit plane cover is blown away when the AKM is fired. A low conductivity composite structure supports the AKM and minimizes conductive heat leak into the S/C. That structure is also covered with MLI.

4.3.7.2 Cost-Reduction Design Features. Developmental effort was reduced by employing proven designs. The solid-state thermostatically controlled heaters were built and used on the NRL's NaS Battery Flight Experiment. The AKM thermal design approach was implemented and proven on *Clementine*.

4.3.7.3 Resource Margins and Reserves. SINDA and TRASYS thermal modeling and analysis tools predicted temperatures and supported parametric studies. Three operational scenarios were investigated: initial acquisition/GTO; nominal GEO operations; and safe-hold. The cold case was identified as the GEO safe/hold mode, and drives heater power requirements. The hot case was identified as GEO operations, and drives radiator sizing. Parameters for the respective cases varied, including optical properties of tapes, films, coatings, and other surfaces due to on-orbit degradation, and seasonal solar flux variations, all of which have significant thermal effects. Optical properties (solar absorbance and infrared emittance) of the materials also varied.The beta angle (angle between the orbit plane and the solar vector) was set to 0˚ to determine the heater power needed to maintain minimum temperatures for components during eclipse. For hot operational cases, the beta angle was raised to avoid any eclipse. The MLI effectiveness was also varied from 0.06 to 0.006. Table 4-29 lists the predicted temperature extremes during the mission and the margins. Except for the minimum SSPA temperature, operational requirements were used for all components to calculate margins. The SSPA experiences its cold extreme during the safe-hold mode. For maximum temperatures, a 10˚C margin exists, except for the battery and the Instrument mount I/F that have a +2˚C control requirement. A thermal design verification test (TDVT) is per-

Table 4-29. Temp. Predictions and Margins

Component	Predictions (˚C)			
	Extremes		Margins	
	Min	Max	Min	Max
CT&DH Electronics	5.0	29.5	5.0	10.5
ADCS:				
▪ IMU	5.0	28.8	5.0	11.2
▪ Sun Sensor & Electronics	5.0	12.0	5.0	28.0
▪ Star Tracker Camera	5.0	15.0	5.0	25.0
▪ Thruster Valves	10.0	22.5	5.0	17.5
▪ Propellant Tank & Lines	10.0	23.0	5.0	17.0
RF Telecom				
▪ Receiver	18.9	25.4	18.9	14.6
▪ Transmitter	18.9	25.4	18.9	14.6
▪ Power Amplifiers	-10.0	29.5	10.0	10.5
Electrical Power Subsystem				
▪ PCDE	9.1	29.9	9.1	10.1
▪ Battery	-5.0	11.7	5.0	8.3
Structure				
▪ P/L Mount I/Fs	18.0	22.0	0.0	0.0
AKM	19.0	23.0	19.0	20.0

formed at the system level to verify all critical instrument/bus interactions and overall system performance requirements.

4.3.7.4 Master Equipment List. All material meets NASA outgassing specification for <1% TML and <0.1% CVCM. All MLI pieces are separately grounded. All heaters are thin polymide (Kapton) film-encapsulated elements. An acrylic adhesive bonds the heaters to the respective surfaces. The thermostats (except for the solid state thermostats for the P/L I/F) are hermetically sealed bi-metallic switches.

4.3.8 Structures Subsystem. The Structures Subsystem provides a load path for all load cases encountered during the mission, structural mounts, overall stiffness, and support for all bus mounted electrical components. This primary structure also houses the AKM motor and hydrazine tank, provides sufficient area for solar power generation, shades the instrument during the science portion of the mission, and provides proper control for the ACS authority.

4.3.8.1 Characteristics and Requirements. The philosophy of the mechanical design was to use a simple design based on missions successfully flown in the past at the NRL. To provide the maximum volume for potential growth, the bus was optimized for the Delta 7425 fairing. This allowed for substantial margin in the available volume and surface area for mounting components. Due to the requirement to be dynamically balanced during all phases of the mission, the major components (AKM, RCS tanks, and the instrument assembly) were positioned along the spin axis. The main volume constraint in the fairing came in the axial direction. The baseline design consists of an all-aluminum hexagon bus consisting of a main thrust tube, honeycomb panels and decks, deck angles, and longerons. The design efficiently transfers loads to the L/V and provides the necessary stiffness. The primary structure is designed with positive margins of safety using factors of 1.25 for yield and 1.40 for ultimate. The structure will be tested to protoflight levels as described in Section 4.6. The major components of the primary structure are summarized in more detail:

❒ *Thrust Tube and L/V Adapters:* The primary structure that will provide the load path for launch loads is a monocoque aluminum thrust tube and L/V adapters. The thrust tube will house the STAR 30 AKM motor and the hydrazine tank and will provide structural mounts for the longerons and deck angles. The design of the thrust tube and adapters consists of an aluminum skin, rings, and longerons incorporated into a single structure for each. The adapters are secured to the thrust tube using Marmon clamp V bands at each I/F.

❒ *Instrument Shear Panels:* The instrument shear panels transfer the axial and lateral loads from the instrument assembly to the thrust tube. The panels are of aluminum honeycomb design. Brackets secure the instrument assembly's three point flexure mounts to the panels. These flexure mounts are shimmed at assembly with the mounting brackets to meet the alignment requirement.

❒ *Electronics Deck/Enclosure Panels/Instrument I/F Deck:* All panels and deck structures are aluminum honeycomb. The electronics deck supports all bus-mounted electrical components while the enclosure panels and instrument I/F deck provide stiffness to the overall primary structure.

❒ *Longerons/Deck Angles:* Similar to other successful NRL designs, a longeron/deck angle design is baselined. This internal skeleton secures and transfers shear loads from all panels and decks to the thrust tube. This design provides a very stiff

and efficient fully enclosed structure for handling all load cases throughout the mission.

❒ *Solar Array/Sun Shield Assembly:* The S/A/Sun shield assembly must provide enough area to generate required power and also shade the instrument during the science portion of the mission. Due to the limitations of the L/V fairing and S/C volume, all six sides of the array assembly are hinged at the center. With the limitations of the location of the center-of-pressure, each of the six sides must hinge at the side of the S/C furthest from the instrument I/F. Low thermal expansion graphite epoxy facesheets and aluminum honeycomb core are used to design the S/A panels. These components were heavily influenced by past programs at NRL, including *Clementine*. To provide the proper control for the ACS authority, solar trim tabs similar to those used on the GOES I-M S/C are at the end of each S/A panel assembly.

4.3.8.2 Cost-Reduction Design Features. To reduce cost, composites were minimized. Additionally, the mechanical design is based on past designs successfully flown at NRL. To reduce risk, both the longeron/deck angle design and the S/A panel design were heavily influenced by the *Clementine* program, and the solar trim tabs are similar to those used on the GOES I-M S/C.

4.3.8.3 Resource Margins and Reserves. Two major structural trade studies were investigated during the concept study. They are summarized in Table 4-30. The mass properties of the design are summarized on Foldout 3, Table A. It is important to note that the mass uncertainty of the system is added at the line item level as a percentage mass reserve depending on the maturity of the part. This method better represents the system's true mass.

4.3.8.4 Master Equipment List. Foldout 3, Table A identifies a master equipment list, component heritage, and a planned qualification approach for each item.

4.3.9 Mechanisms Subsystem. The Mechanisms Subsystem consists of six assemblies that perform the necessary deployments and separations to achieve the S/C's operational configuration and provide precise adjustment capability for spin balance and solar torque.

4.3.9.1 Characteristics and Requirements. The six mechanism assemblies: (1) S/A/Sun shield release and deployment subsystem (SSRDS), (2) L/V separation subsystem, (3) AKM separation system, (4) balance adjustment mechanisms, (5) trim tab positioners, and (6) omni antenna release and deployment subsystem. The L/V and AKM separation systems are virtual duplicates of one another. All mechanisms except the S/A/Sun shield deployment subsystem are straightforward implementations or adaptations of mechanisms with NRL and/or industry heritage. The S/A/Sun shield deployment will require significant development work in Phases B & C.

Table 4-30. Major Mechanical Trades

Trade	Design	Vol	Dsn Complexity	Struc Load Path	Mass	S/A Assy
Primary Structure	Square Bus Structure with Internal Thrust Tube	G	G	VG	G	G
	Hexagon Bus Structure with Internal Thrust Tube	VG	G	VG	G	VG
	Hexagon Bus Structure with Interstage	VG	G	P	G	VG
	Hexagon Bus Structure with Truss Interstage	VG	P	P	G	VG
Component Layout	Components Mounted to Enclosure Panels	VG	G	G	P	NA
	Components Mounted to Electronics Deck	G	VG	G	VG	NA
	Components Mounted to Thrust Tube	P	G	VG	P	NA

The mechanisms must be capable of operating in any of the expected on-orbit thermal conditions. The mechanisms must work properly after exposure to launch loads, vibration, and acoustics. They must be highly reliable, as they are all mission critical functions. NRL has always emphasized a rigorous test program as the best way to assure highly reliable mechanisms. All mechanisms are thoroughly qualified, and each mechanism is thoroughly acceptance tested. The mechanisms qualification and acceptance testing are summarized in Table 4-31. The acceptance test emphasizes verifying mechanism performance and in-family behavior. This emphasis on testing has been one of the key factors in NRL's excellent on-orbit mechanisms reliability.

❒ *S/A/Sun Shield Release and Deployment Subsystem (SSRDS):* The SSRDS is the most challenging mechanism on the FAME bus and the only one

Table 4-31. FAME Mechanisms Test Matrix

Mechanisms Qualification Testing							
Mechanism	**Burn-in**	**Vibe**	**Thermal Cycle**	**TVAC Hot**	**TVAC Cold**	**Life**	**Comment**
SSRDS		X	X	X	X		
L/V & AKM Separation System	3 Manual Releases	System Level	System Level	X	X		SEP System Dedicated Static Loads Testing
Balance Mechanisms							Delta Qual Only as Necessary
Trim Tab Positioners							Delta Qual Only as Necessary
Omni Ant. Release & Deploy							No Delta Qual Required
Mechanisms Acceptance Testing							
Mechanism	**Burn-in**	**Vibe**	**Thermal Cycle**	**TVAC Hot**	**TVAC Cold**	**Performance**	**Comment**
SSRDS	In Air Deploy	System Level				X	Deploy Before System Level Environments Release After System Level Vibe as Pyroshock Test
L/V & AKM Separation System	3 Manual Releases	System Level					Release After System Level Vibe as Pyroshock Test
Balance Mechanisms	X	X	X	X	X	X	200 Hour Burn-in
Trim Tab Positioners	X	X	X	X	X	X	200 Hour Burn-in
Omni Ant. Release & Deploy	X	System Level				X	10 Deployments as Burn-in

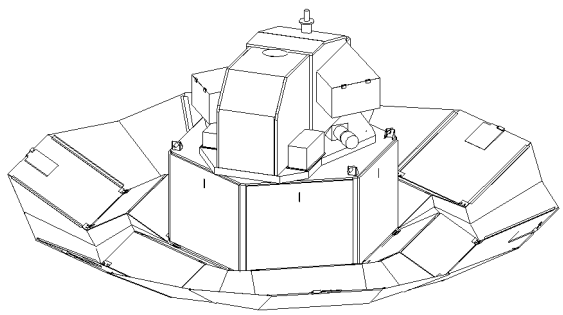

Figure 4-17. Sun Shield Partially Deployed

requiring significant development. The SSRDS includes S/A release mechanisms, spring driven hinges, latches, and the Sun shield, which must unfurl reliably after being wrapped for stowage. This mechanical system is being designed for maximum simplicity and reliability. Foldout 2, Figures B, D, and E show the stowed and deployed configuration for the SSRDS. Figure 4-17 shows the partially deployed configuration. The S/A consists of six panel triplets. The Sun shield is lightly stretched between the panel sets as webbing. Each panel triplet is stowed in a Z-fold manner. On release, all six panel sets comprising the S/A are simultaneously released to the deployed position by spring-powered hinges acting through the entire hinge travel. Kickoff springs, which supplement the hinge springs, provide large force margins to ensure initial motion of the array. The S/As are preloaded closed during launch by one bolt for each set of panels. Six bolt cutters pre-release simultaneously; each cutter unlatches one of the six S/A panel triplets directly. The bolt cutters are redundant. Key to the success of the SSRDS is the unfurling of the Sun shield, the only non-standard aspect of the S/A deployment. The Sun shield consists of lightweight thermal blanket material chosen to have the proper solar reflectance for the Sun side and the toughness and handling properties necessary for unfurling. The shade material between each set of panels is rolled into a double spiral that easily unwraps as it is pulled by the deploying solar panels. On full deployment, the material is under a very light tension to maintain its shape and to minimize resistance to the deployment and latching of the solar panels. This same scheme is used to unfurl the antenna mesh on the TDRSS 3.66 m deployable antenna, which has proven reliable in several flying TDRSS satellites. With good design and testing methods we are confident that, by keeping the design simple, the SSRDS can be an extremely reliable mechanism. A quarter-scale prototype of the SSRDS is built and extensively tested during Phase B. This model will be invaluable to work out the details of Sun shield wrapping and deployment and to develop the equally important test techniques. The use of this model will eliminate the development risk of the

SSRDS early in the FAME program. Two dominant goals have driven the SSRDS design: (1) design simplicity and (2) ease of testing. The SSRDS can be tested as a full assembly in air at NRL using a system of counterweights to support the panel mass during deployment.

❒ *Launch Vehicle and AKM Separation System:* A 76.20-cm Marmon clamp is used to release the FAME bus from the L/V. An identical Marmon clamp releases the AKM after AKM burnout. Compression spring cartridges provide a 30.48-cm per second separation velocity with low tip off on release of each joint. A Marmon clamp which provides a straight continuous load path, was selected for this task because it is the most efficient way to provide a separation joint for cylindrical structures. The 106.68 cm *Clementine* Marmon clamp will be scaled down for FAME and delta qualified in this configuration for the worst case FAME loads. The Marmon clamp is released with 0.635-cm explosive clamp separators that are a qualified catalog item from Hi Shear Inc.

❒ *Balance Adjust Mechanisms:* Four movable masses, selected from one of several available heritage designs, are required to trim the static and dynamic spin balance of the FAME bus on orbit in the deployed configuration. These masses will be used as required to adjust the spin balance through mission life to the required ±30 as.

❒ *Trim Tab Positioners:* The solar pressure trim tabs are positioned by stepper motor driven hinges. The hinges will be capable of 0 to 350-degree rotation. The selected implementation will include a flight-qualified stepper motor with a zero backlash gearbox. This system meets the requirements of highly repeatable trim tab positioning with 0.05 degree resolution using very simple electronics and mechanical components. This mechanism will have very low life cycle requirements so risk of positioner failure is slight. The inertia is low and the mechanism is driven very slowly to minimize the torque requirements. The flight qualified positioner will be competitively selected from one of several vendors with goals of minimum mass, maximum reliability, and low cost.

❒ *Omni Antenna Release and Deployment Mechanism:* The omni antenna release and deployment mechanism is identical to the *Clementine* high gain antenna feed release and deployment mechanism. The mechanism uses a paraffin actuator-driven pin puller to release the feed. The hinge is made from a pair of carpenter spring tapes that provide deployment torque and repeatable, reliable latching. The deployment is started with kickoff springs that ensure reliable separation.

4.3.9.2 Cost-Reduction Design Features. To minimize design effort, the S/A hinges are adaptations of hinge designs that have been in use on NRL S/C S/As for more than two decades. The balance adjust mechanisms will be competitively procured from one of the several available heritage designs. Additionally, the Sun shield will be unfurled by using the same method adopted for several TDRSS satellites to unfurl the mesh on the 3.66 m deployable antenna. We will also draw upon the experience gained at NRL in an ongoing R&D effort to develop a deployable solar concentrator that includes unfurling reflective film for the reflective portion of the concentrator. Motor-driven deployment was considered and dismissed because it added to cost, electrical complexity, and mass. The release mechanisms and hinge approach was selected because the available heritage NRL mechanisms are cost efficient and proven reliable in flight. The heritage of the TDRSS antennas coupled with our solar concentrator experience drove us to select the shade unfurling approach.

4.3.9.3 Resource Margins and Reserves. Deployment of the S/A incorporates spring-powered hinges supplemented with kickoff springs provide large force margins to ensure initial motion of the array. Spring-driven hinges with kickoff springs and no dampers have functioned flawlessly on all NRL deployables since the 1960's.

4.3.9.4 Master Equipment List. Foldout 3, Table A identifies a master equipment list, component heritage, and a planned qualification approaches.

4.3.10 Reaction Control Subsystem.

4.3.10.1 Characteristics and Requirements. The RCS, schematically represented in Figure 4-18, consists of a propellant tank, fill valves, filter, latching isolation valve, and thrusters with integral redundant shut-off valves. The system was selected to meet the mission requirements and maximize the use of qualified components with flight heritage for cost reduction. The flight vehicle has eight 4.89 to 1.33 N hydrazine thrusters (Figure 4-19).

This configuration provides for spin jets about the x-axis with active thruster nutation control, an x-axis delta velocity capability, and three-axis attitude control with full redundancy against a thruster failure. The spin jets and delta velocity thrusters, fired in pairs, provide maximum moments about the vehicle center of gravity. The RCS system has both mechanical and electrical I/Fs. The S/C command and data handling system controls the RCS valves and thrusters including sequencing the thruster catalyst bed heater power. The RCS telemetry, which is used primarily for system status, is collected and stored for the pressure transducer, temperature sensors, and latch valve open/close status flags. The thermal control system provides heaters so that the hydrazine propellant does not freeze under cold environmental conditions. Fail-safe S/W prevents thrusters from firing inadvertently with a single command. Additionally, there is tolerance to a thruster commanded and left ON by S/W that will command OFF all thrusters unless a timer is updated by command during a maneuver.

❒ *Propellant Tank:* The 48.26 cm diameter propellant tank is designed and fabricated by Pressure Systems Incorporated as P/N 80274-1. Constructed from a Titanium shell, it contains a bladder for positive expulsion. The tank has been previously qualified in accordance with MIL-STD-1522 for the EXOSAT program and more recently for Orbital Sciences Corporation's Orbview program. The tank has an operating pressure of up to 377 psi and incorporates a 2:1 burst factor for range safety considerations.

❒ *Filter:* The filter guarantees system cleanliness. The propellant is particulate filtered as it exits the storage tank and before it enters the contamination sensitive propellant valves and thrusters. The filter is a flight-qualified 15 micron design manufactured by Vacco Industries.

❒ *Latching Isolation Valve:* The latching isolation valve is manufactured by MOOG Space Products Division as P/N51-181. The isolation valve is a torque motor design with an integral inlet filter for contamination protection. It has been qualified previously for the 64-flight Globalstar program.

❒ *Thrusters:* The thrusters are manufactured by Primex Aerospace as P/N MR-111. The design is fully qualified and has flown in space more than 500 times. The thruster assembly includes serially-redundant thruster valves, catalyst bed, catalyst bed heaters, thruster chamber, and thruster heaters. The nominal beginning of life thrust is 4.89 N,

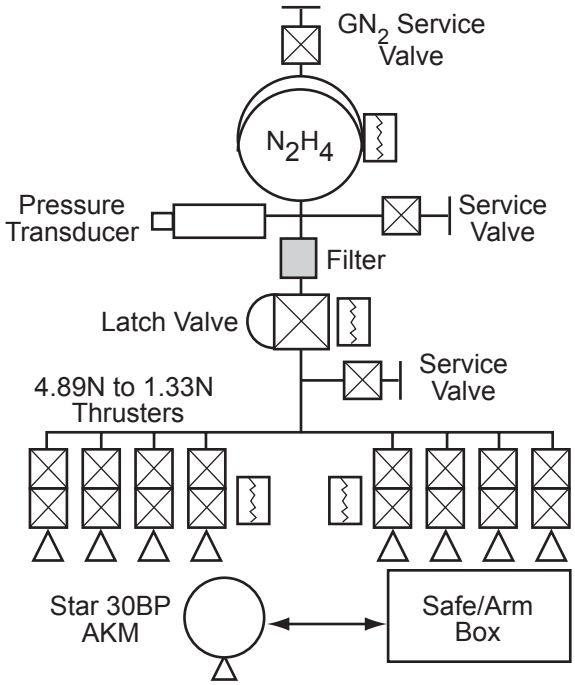

Figure 4-18. FAME RCS Schematic

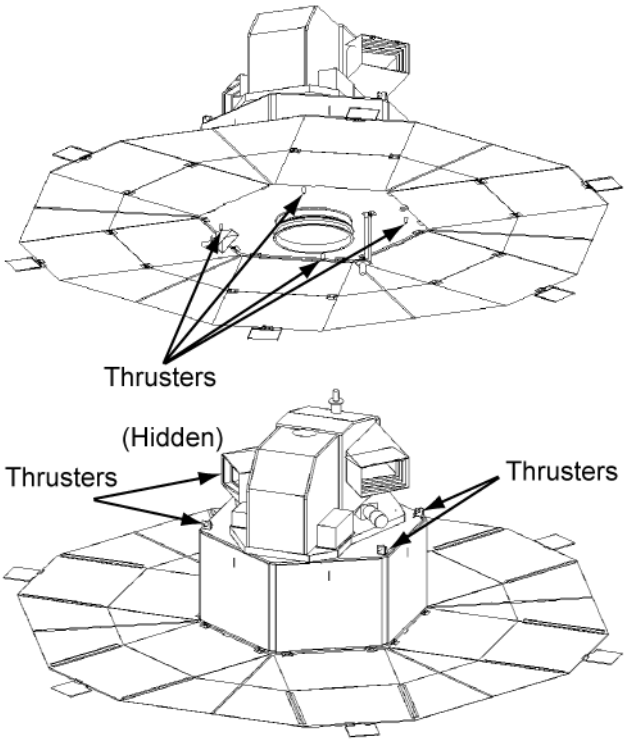

Figure 4-19. RCS Layout

which decreases as propellant is used and system pressure decreases. The end of life thrust is nominally 1.33 N. The thrusters contain catalyst bed heaters to extend catalyst life and provide repeatable impulse. The thruster assemblies contain integral inlet filtration before the shut-off valves to protect from contamination. A preliminary plume contamination analysis was performed during the study period to satisfy the science mission planners. This analysis assisted in the thruster placement and demonstrated satisfactory science mission performance with the on-board hydrazine system as described in this section.

❒ *Pressure Transducer:* The flight-qualified pressure transducer is manufactured by Taber Industries. The fill valves are manufactured by OEA and have been qualified for many programs, including *Clementine*. The fill valve includes an integral inlet filter to protect from contamination.

❒ *Quality Requirements:* The RCS components and tubing are assembled in cleanrooms in accordance with military and industry standards to mitigate contamination. The RCS system is constructed from CRES 304L tubing to ensure complete propellant compatibility for the mission life. Additionally, the tubing systems are assembled using highly controlled orbital tungsten inert gas (TIG) automatic fusion welding. This weld joining method is highly reliable, repeatable, and clean.

The FAME propulsion system is built in accordance with the program quality assurance and control plan. This system includes verification and inspection of the 'As-Built' configuration of the system before system-level testing at the S/C level. Items under configuration control include drawing release and revision as well as inspection of critical steps and processes with the flight build. The FAME propulsion system quality is verified throughout the prelaunch and integration cycle by testing as outlined in a predetermined FAME specific test plan. The propulsion system components are tested at the component level, again after integration into the propulsion assembly, and as a function of the satellite-level integration and test activities before propellant load and launch. The launch operations are supported by the NRL team at Cape Canaveral in coordination with the Delta L/V provider and the range support services contractor. These on-site operations verify the system integrity via functional testing, which includes loading propellant and pressurizing the RCS, integrating the SRM, and spin balancing the space vehicle before transportation to the launch pad for stacking on the Delta L/V.

❒ *Safety Requirements:* All hardware is designed, built, and tested to comply with the requirements of EWR 127-1. The Safety Review Process is initiated at contract award and will include formal and informal reviews of hardware and test procedures to verify physical and personal safety. The safety process includes the submission of a Safety Assessment Report (SAR) that will describe the systems, hazards, and risk mitigation. All propulsion systems are tolerant to inadvertent activation while in ground processing. The electrical systems that control firing of the SRM and hydrazine system will contain inhibits including a mechanical Safe and Arm device that will not be activated until the space vehicle is stacked in the launch configuration. All operations that compromise these activation inhibits, such as pre-launch ground testing, are handled by safety approved hazardous operations procedures.

4.3.10.2 Cost-Reduction Design Features. Propulsion design implementations investigated for the FAME mission included combinations of solid, cold gas, bi-propellant chemical, monopropellant chemical, and electric propulsion. A monopropellant system was chosen to meet mission requirements for its inherent simplicity, proven reliability, and low cost. A chemical system was required for this mission due to the need for a total impulse (thrust force times time) that is greater than a cold gas system could provide within the volume constraints of the L/V. Additionally, a bi-propellant chemical system was not chosen for this system due to its greater cost and complexity, and inability to provide the low thrust required for precision attitude control during the science collection mission. Costs were reduced by using previously qualified hardware wherever possible. The propellant tank, filter, latching isolation valve, thrusters, and pressure transducer are all flight qualified items.

4.3.10.3 Resource Margins and Reserves. The propellant use budget is listed in Table 4-32. The fuel budget shows expected orbit operations for orbit transfer, attitude control, and correction for worst case L/V and SRM injection errors. The 41

kg fuel budget shows a fuel margin of 25%, including the worst case injection errors. This methodology provides additional propellant margin over a nominal injection. The propulsion subsystem is designed for a minimum mission life of 5 years, including propellant to perform the expected mission operations. Selected components have demonstrated, through qualification, capabilities exceeding the proposed 5 year mission.

4.3.10.4 Master Equipment List. Specialized GSE is required to process, service, and test the S/C in preparation for launch. The baseline is to use the launch site equipment and personnel for FAME. Alternatively, there is existing *Clementine* GSE, along with trained NRL personnel, that can be made available if required. Available NRL hardware includes fuel loading carts, pressure console, vacuum cart, and miscellaneous gas and liquid lines, couplings, and manifolds.

Table 4-32. Propellant Budget

Maneuver	Propellant Used (kg)
Initial Acquisition & Pointing	0.9
Spin up FAME with SRM	5.1
Active Nutation Control	2.0
Despin FAME with SRM	5.1
AKM Total Impulse Error (0.5%)	3.4
Jettison SRM and Adapter	0.1
1˚ AKM Pointing (i = 0.63) Error Correction	0.0
Decrease Perigee by 300 km to Final GEO Orbit	1.3
Decrease Apogee by 300 km to Final GEO Orbit	1.3
N-S Stationkeeping (1˚/year)	0.0
E-W Stationkeeping (for ±1˚ Longitude)	2.4
Spin-up for Mission	0.2
5 Year Mission ACS (All Thruster Precession)	7.3
Raise Apogee by 300 km to Deorbit	1.3
Raise Perigee by 300 km to Deorbit	1.3
20 Mission Safe Hold Maneuvers	3.4
2% Unusable Residual	2.2
25% Fuel Margin	12.6
Total	49.8

4.4 Science Payload.

4.4.1 Instrument Overview. The current FAME instrument architecture, shown in Foldout 4, is the result of design work and trade studies performed during the present concept study, earlier studies on the FAME mission, and a proven heritage from the successful ESA mission *Hipparcos* (Perryman et al. 1989). The FAME instrument is designed, assembled, aligned, and tested by LMMS at its Palo Alto, CA facility. Major subsystem suppliers include Raytheon for the optics, Composite Optics for the metering structure, and EEV for the CCDs. The instrument master equipment list is shown in Table 4-33. LMMS also supports instrument integration to the S/C, space vehicle system test, launch operations, and mission operations. Our objective in developing the instrument design was to reduce risks associated with mission performance, and to maintain the cost within the limitations set for the MIDEX experiments. Top-level mission-derived requirements are summarized in Table 4-34. These requirements flow down to the subsystems using an integrated sensor model that optimizes the balance between risk, cost, and performance. The instrument design resulting from the CSR is described in detail in the following sections. Residual technology risks associated with the instrument design include centroiding accuracy, thermo-mechanical stability, and thermal control of the instrument. To reduce the centroiding risk, during the CSR, we increased the pixel sampling of the unresolved star image by extending the focal length of the optical system to 15 m, which results in 2.0 pixels per central lobe of the point spread function. We also selected proven, commercially available, low noise CCDs that meet the FAME science-derived noise and quantum efficiency requirements. The selected CCD device for FAME is a slightly modified EEV CCD44-82. Modifications include adding notch technology for greater radiation hardening, and an array transfer gate to allow for TDI readout. To confirm centroiding performance, we are experimentally demonstrating spot tracking under LMMS internal funding using a flight-like EEV focal plane and a star field simulator. Described in section 4.4.3.2, this experiment will validate centroiding accuracy and allow data processing algorithms to be evaluated and refined to enhance the instrument performance margin.

For maximum thermo-mechanical stability, all mirrors are manufactured from ULE, an ultra-low thermal expansion material from Corning Glass. A well understood glass, ULE has been applied in high thermal stability optical systems for more than two decades. Our metering structure is a

Table 4-33. Instrument Master Equipment List

Instrument Component	Qty	Comments/Vendor	Flight Heritage
Composite Structure	1	Composite Optics Inc.	AXAF, MODIS
Compound Mirror	2	Raytheon Systems Co	SXI,AXAF,TRACE
Primary Mirror	1	Raytheon Systems Co	SXI,AXAF,TRACE
Secondary Mirror	1	Raytheon Systems Co	SXI,AXAF,TRACE
Tertiary Mirror	1	Raytheon Systems Co	SXI,AXAF,TRACE
Fold Flat 0	1	Raytheon Systems Co	SXI,AXAF,TRACE
Fold Flat 1	1	Raytheon Systems Co	SXI,AXAF,TRACE
Fold Flat 2	1	Raytheon Systems Co	SXI,AXAF,TRACE
Fold Flat 3	1	Raytheon Systems Co	SXI,AXAF,TRACE
Fold Flat 4	1	Raytheon Systems Co	SXI,AXAF,TRACE
Window	1	Raytheon Systems Co	SXI,AXAF,TRACE
Integrating Sphere	1	Labsphere Inc.	MISR, MODIS, MERIS, ALI
CCDs	24	EEV Limited	AXAF
Photometric Filters	4	Raytheon Systems Co	SXI,AXAF,TRACE
Neutral Density Filters Type A	3	Raytheon Systems Co	SXI,AXAF,TRACE
Neutral Density Filters Type B	3	Raytheon Systems Co	SXI,AXAF,TRACE
Baffles	2	LMMS Designed	LMMS Autonomous Star Tracker
Baffle Aperture Covers	2	Starsys Research	TRIANA
CCD Housing	1	LMMS Designed	LMMS Autonomous Star Tracker
CCD Radiator	1	LMMS Designed	RM-20, UARS
Mounting Flexures	3	LMMS Designed	New design
Thermal Blankets	As Required	LMMS Designed	SXI, MDI, HIRDLS
Heaters	As Required	Tayco Engineering	Gravity Probe-B
Data Processor Control Assembly Electronics	1	LMMS Designed	LMMS Autonomous Star Tracker
CCD Control Assembly Electronics Box	1	LMMS Designed	LMMS Autonomous Star Tracker
Analog Processor Assembly	4	LMMS Designed	LMMS Autonomous Star Tracker

Table 4-34. FAME Instrument Requirements

Parameter	Value
Wavelength Range	400-900 nm
Magnitude Range (m_v)	5-15
Astrometric Accuracy	50 μas (at $m_v \leq 9$)
Single Look Centroiding	600 μas (at $m_v \leq 9$)
Photometric Accuracy	1 millimagnitude (at $m_v = 9$)

graphite cyanate composite designed and built by Composite Optics to match the coefficient of thermal expansion (CTE) of ULE to further enhance stability. This structural material is a high modulus graphite combined with a cyanate ester resin system and has been qualified on numerous space flight programs. Precise CTE matching between structure and mirrors was demonstrated (at 300 K and low temperatures) as part of the Next Generation Space Telescope (NGST) prototype primary mirror demonstrator. Thermal control of the focal plane assembly to ±63 mK is necessary for the instrument to achieve a single look centroiding accuracy of 600 μas. Under the Space Interferometry Mission (SIM) program, LMMS is currently demonstrating state-of-the-art thermal analysis and thermal control of precision optical structures using the Thermal Opto-Mechanical (TOM) testbed. TOM is validating our thermal analysis capability by comparing analytical predictions of the SIM thermal model to testbed experimental results to a precision of a few mK. This thermal analysis tool is the same one used for FAME. TOM is also demonstrating the capability to control a precision optical structure to within 10 mK, which is significantly tighter than the FAME requirement.

The optical ray trace for our current design is shown in Foldout 4. The optical system images two regions of the sky onto a single large-format CCD mosaic focal plane array. Instrument electronics control and read out this camera and digitize the pixel output. Field Programmable Gate Arrays (FPGAs) “window” the digitized CCD output around stars listed in the on-board star catalog.

The Data Processor and Control Assembly electronics combine the windowed data from the six FPGAs, along with header information, into a single data stream that is transferred to the S/C where it is queued for telemetry to the FAME Control Center. The instrument electronics also control the temperatures of the optical bench, optics, and the focal plane.

The team revised the optical design to improve stability, and increased the telescope focal length from 7.5 m to 15.0 m. To improve precision, the aperture was widened from 0.5 to 0.6 m. The longer focal length telescope has a diffraction-limited spot size of 2.0 pixels, compared to 1.2 pixels for the previous design, which eases the centroiding requirement. The instrument FOVs are separated by 81.5 deg, rather than 65 deg in the earlier design. This permits a more compact telescope design. The FAME rotation period about the spin axis is now doubled to 40 minutes, which, with the 15 m focal length, maintains the CCD time delay integration rate at 2.6 kHz. Twenty-four 2048 x 4096 pixel CCDs populate the focal plane. Image quality is uniformly excellent across the entire focal plane. Four of the CCDs are used to make photometric observations and are fitted with Sloan filters. The photometric filters are implemented both with and without neutral density filters to achieve the full magnitude range for each of the photometric wavelength bands. Three of the CCDs, with higher power neutral density filters (NDa), are used to make astrometric observations of fifth to eighth magnitude stars. Three CCDs, with lower power neutral density filters (NDb), are used to make astrometric observations of seventh to tenth magnitude stars. The remaining CCDs are used to make astrometric observations of ninth to fifteenth magnitude stars.

An alternate approach to achieving the full FAME magnitude range will be traded against the neutral density filters during Phase B. The alternate approach uses start-stop clocking of the CCD TDI operation for bright stars. This limits the charge within individual pixels by creating multiple exposures of the star on the CCD and would eliminate the need for neutral density filters.

To reduce the downlink system cost and risk, the instrument does not transmit all of the focal plane data to the ground. Instead, we extract the science data of interest using an on-board star catalog containing 40 million stars. A “window,” normally 20 pixel columns by 10 pixel rows, is extracted containing the star and transmitted to the ground in the science data stream for processing. For each row, the 20 columns are summed together in the instrument so that only 10 data words are transmitted to the ground for each “nominal” star window. The on-board star catalog contains a window size and bin size value for each star so that the bin and window size can be varied for double stars, bright stars, and other special cases.

4.4.2 Optics.

4.4.2.1 Optics Design. The revised optical design for the FAME instrument satisfies all optical requirements while simplifying fabrication, assembly, and testing, as shown in Table 4-35. It provides diffraction-limited imagery on a flat image plane, which simplifies CCD alignment and reduces assembly cost. Additional improvements in performance are achieved by increasing in the system focal length, entrance pupil size, and placing all the powered optics on a common optical centerline. The revised design provides a centered three mirror, anastigmatic telescope design having a wide field of view and a compact configuration, as shown in Figures 4-20 and 4-21. The aberration residuals of this design are near zero. The design Strehl ratio of 0.99 (at 0.58 μm) or better is achieved over the entire 1.1 degree circular FOV, as demonstrated in Figure 4-22. The image deviation from a true f-theta distortion mapping is 0.02%. This distortion is removed during data reduction without affecting mission science. Packaging the optics within the allowable volume, while providing good access to all the mirrors for mounting, is achieved by the passing the light path through a central hole in fold mirror #0 at the intermediate image plane. The reflective portion of this mirror folds the path near the exit pupil. This configuration permits high quality, low distortion images to be achieved over a flat field, facilitating high accuracy centroiding of the stellar images. The improvements between the 7.5-m and the 15-m focal length optical designs are summarized in Table 4-36. The 15-m design is anticipated to be lower in cost and risk by virtue of its simpler fabrication, assembly, and testing.

Table 4-35. FAME 15-Meter Focal Length Optical Design Requirements

Parameter	Derived Requirement	15 m Design
Aperture	0.25 x 0.5 m	0.25 x 0.6 m
Obscuration	<50%	50% (const. over FOV)
Focal length	15 meters	15 meters
Volume	Fit into 2 x 1 m cylinder	Yes
Linearity (f-theta)	<0.02%	0.02%
Field-of-view	1.1 deg circular (@ 15 m)	1.1 deg circular (@ 15 m)
Field curvature	>7.5 meters	Flat
Image quality (geometric)	<<Airy circle	1/20 Airy circle (only conic surfs.)
Compound mirror angle (between FOVs)	20 to 160 deg	81.5 deg
Stray light control	Relayed TMA	Yes
Mirror mounting	Access to mirror backs	Yes (no cantilevers)
Refractive elements	Sloan filters	Sloan filters, ND filters, CCD window

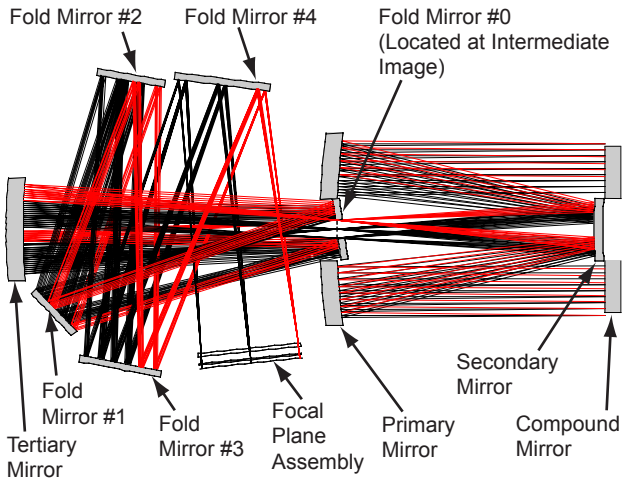

Figure 4-20. Optical Design—Side View

During this study phase, development is continuing on the optical fabrication and alignment tolerances, as well as sensitivities associated with the telescope mirrors and the CCD window. Image motion sensitivities to element motions during on-orbit operation have been calculated and are summarized in Table 4-37. As expected, these stability sensitivities are approximately twice as demanding in the 15-m design due to its longer focal length. Thermal deformation analysis shows that the on-orbit de-center, de-space, and tilt motions

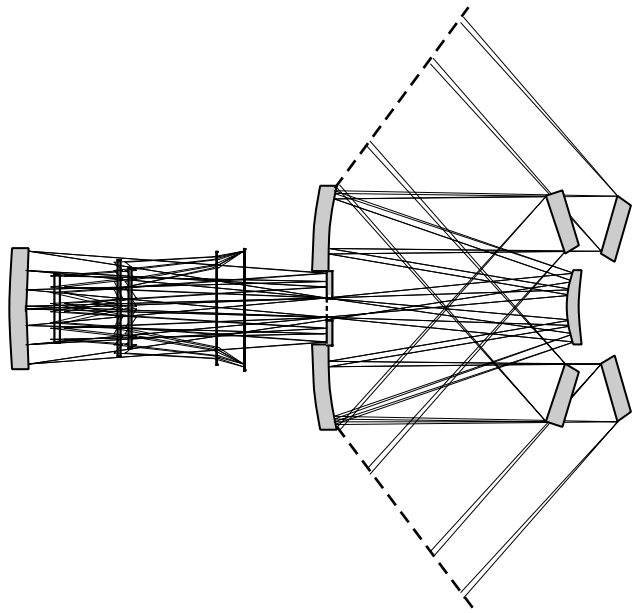

Figure 4-21. FAME Optical Design—Top View

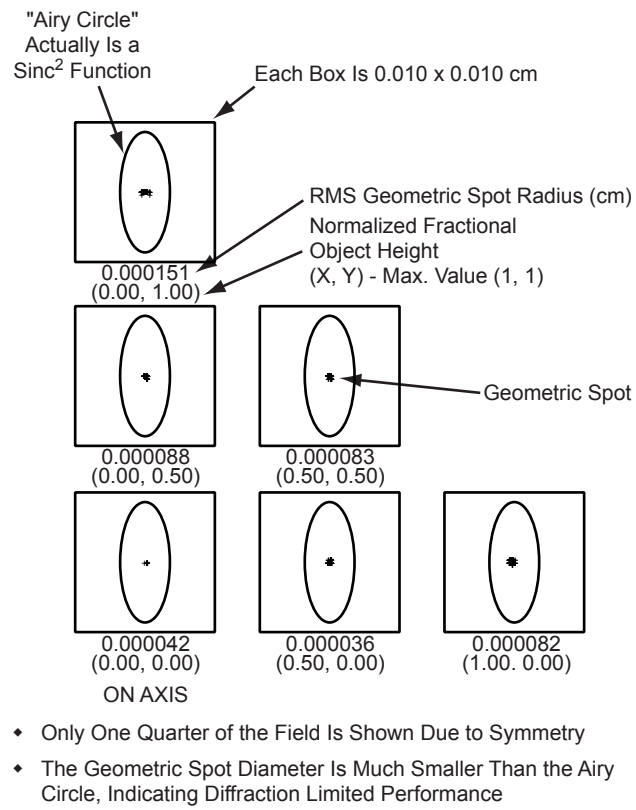

Figure 4-22. Optical Performance (1.1˚ FOV)

for the 15-m design easily meet these requirements, as shown in Table 4-54 in section 4.4.6.1.

Table 4-36. Design Improvements

Optical Subsystem Improvements from Original Proposal (7.5 m) to 15 m	Rationale
Flat image surface	▪ Simplifies mounting of the planar CCDs on a flat surface
Powered mirrors share common optical axis	▪ Facilitates alignment ▪ All mirrors have good accessibility ▪ No cantilevered mirror mounts required
Relayed optical design with an accessible intermediate image (field stop) and exit pupil (Lyot stop)	▪ Excellent stray light control without the use of complex stray light baffles
Entrance pupil function is constant over the entire field	▪ Point-spread function does not change with field position
Additional CCD window	▪ Protects CCDs from thermal energy and contamination, and controls the transmitted spectrum.

Table 4-37. Image Motion Optical Stability

(Amount of perturbation required to produce the specified image shift on the focal plane)				
Element	**1/350 Pixel (Over 1.5 Seconds of Time)**		**1/50 Pixel (Over 10 Minutes of Time)**	
	Decenter (mm)	**Tilt (as)**	**Decenter (mm)**	**Tilt (as)**
Compound mirror	-	0.00031	-	0.0022
Primary	0.000003	0.00031	0.00002	0.0022
Secondary	0.000006	0.00103	0.00004	0.0072
Tertiary	0.000006	0.00103	0.00004	0.0072
Element	**Despace (mm)**	**Tilt (as)**	**Despace (mm)**	**Tilt (as)**
Fold Flat #0	0.000171	0.00103	0.00120	0.0072
Fold Flat #1	0.000043	0.00154	0.00030	0.0108
Fold Flat #2	0.000171	0.00206	0.00120	0.0144
Fold Flat #3	0.000171	0.00257	0.00120	0.0180
Fold Flat #4	0.000114	0.00617	0.00080	0.0432

The revised optical design allows for periodic, on-orbit flat field illumination and CCD calibration. An integrating sphere mounted beside fold flat mirror #4 projects uniform, white light, illumination on the focal plane assembly (FPA) for calibration, as shown in Figure 4-23. On-orbit calibrations allow mapping of the CCDs to determine pixel variations, thereby enabling accurate data analyses. This capability was not proposed in the original design. During ground testing, the performance of the on-board integrating sphere is verified and calibrated by using a laboratory uniform-field white-light source.

4.4.2.2 Optics Fabrication, Assembly, and Test.

The new FAME optical design incorporates a number of strategic design concepts to simplify

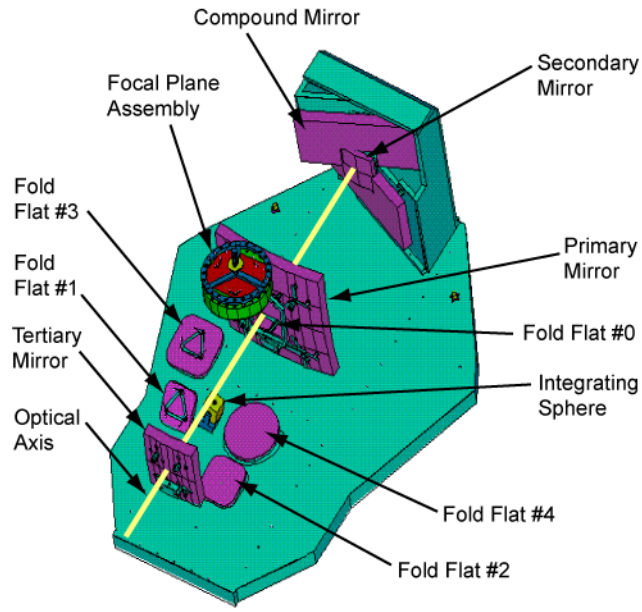

Figure 4-23. Optical Subsystem

Table 4-38. Fab and Assembly Risks

Risk	Level	Mitigation
Mirror Lightweighting	Low	▪ Design based on previous lightweighting designs for space applications ▪ 40% lightweighting reduces the mass but maintains structural integrity for standard fabrication
Primary, Secondary, and Tertiary Mirror Polishing	Low	▪ Radius of curvature allows standard fabrication techniques ▪ Radius of curvature is symmetric around center line allowing for standard fabrication techniques
Flexure Design and Mounting	Low	▪ Design based on previous flexure designs for space applications
Optical Alignment and Stability	Low	▪ Precision shims used for adjustment ▪ Shims lapped as necessary for adjustment ▪ Shims bonded with thermally conductive epoxy
Fix Compound Mirror Angle at 81.5 deg	Low	▪ Custom alignment fixture

and facilitate fabrication, assembly, and test. The optical subsystem is a low risk approach that uses standard fabrication, assembly, and test processes proven on other space flight programs. Table 4-38 shows the risk levels associated with critical optical fabrication, assembly, and test processes, and how those risks are mitigated.

❒ *Fabrication:* A trade study was performed to optimize manufacturing of the optical system. The areas addressed by the study were: (1) lightweighting, (2) surface requirements, (3) fabrication processes, and (4) environment effects.

Lightweighting reduces the effect of gravity sagging during ground-based testing while increasing the opto-mechanical stability. However, as the degree of lightweighting is increased, the design complexity of the rib structure increases while the face sheet becomes thinner. A thinner face sheet increases the polishing complexity and cost. Therefore, to leverage the advantages of lightweighting while keeping complexity at a minimum, 40% lightweighting is chosen as the optimal point before cost and polishing become driving factors. In addition, existing lightweighting schemes are employed that incorporate stress free, flexure mounting points. Surface requirements are driven by the desire to maintain diffraction limited spot size across the focal plane. Several manufacturers have determined that the optics can be readily fabricated to the specifications, shown in Tables 4-39 through 4-41. The flat mirrors are readily polished using conventional continuous polishing laps. The radius mirrors undergo a two-step polishing process: (1) conventional radius polishing, then (2) zonal polishing to achieve final aspheric figure. Several optical manufacturers have equipment and heritage in polishing ultra low expansion glass (ULE). The FPA window is polished using conventional radius techniques. Each mirror is coated with >99% reflectance (0.4- to 0.9-μm wavelength) silver based coating. See Section 4.4.3.1 for a description of the passband limiting window coating. The substrate materials, flexures, and coatings are all mature designs that have been space qualified on previous space programs.

Raytheon Systems Company (RSC) is the preferred supplier for all of the optics. They have the capability and heritage (PRISM, MTI, SXI, AXAF, TRACE, ARES) to fabricate all of the optics. This includes designing the mirror lightweighting, fabricating the mirrors including zonal polishing, fabricating the window, designing and fabricating the mirror mounting flexures, coating, and metrology. Using RSC as the supplier for all of the optics reduces risk by: (1) minimal transportation of optics, (2) a common flexure design, and (3) a common lightweight mounting design. The mirrors with mounted flexures are delivered as complete subassemblies ready for mounting directly onto the optical bench. Source inspection for all of the optics occurs at the manufacturer's facility. Radius mirrors are verified using null corrector lenses. Thermal and other environmental effects can induce stresses within the optics. All of the FAME optics are fixed. There are no active optical elements to correct for optical degradation due to on-orbit thermal distortion. The optics are stress relieved during fabrication using standard processes for ULE. Stress relieving enables the optics to be repeatedly cycled through the survivability temperature of –40 to 50˚C, and continue to provide optical stability and diffraction limited performance at the telescope operating temperature of 20˚C.

❒ *Assembly:* The new optical design streamlines assembly of the FAME optical system. Optic accessibility and an on-axis telescope, as shown in Figure 4-23, reduce the assembly process schedule and cost. In addition, standard techniques and procedures from previous flight programs reduce risk. All assembly is performed in an LMMS cleanroom facility. To reduce schedule, the optical system assembly is divided into three separate builds. The three separate builds are (1) the compound mirror, (2) the telescope, and (3) the fold flats. Hard points on the optical bench are used to establish the optical axis, thus allowing any of the three builds to be integrated at any time. This flexibility reduces schedule and risk of schedule impact. Throughout assembly and integration, alignment is verified using a full aperture auto-collimator and interferometer. The interferometer also verifies stress-free mounting and the diffraction-limited operation of the optical system. Individual optics, all three assembly builds, and the integrated optical system can be tested using these instruments. This ensures that the optics are correct when mounted, and eliminates delays in assembly and final integration testing caused by alignment errors. The compound mirror is assembled such that there is an 81.5˚ angle between the FOVs and a stability as shown in Table 4-37. Alignment of the 81.5˚ basic angle is achieved using a calibrated precision rotary table and alignment fixture. LMMS developed a novel technique for the GP-B program that bonds glass surfaces together to stability levels of <0.001 arcseconds. This technique is stress free, stronger than optical contacting, and capable of maintaining alignment through temperature cycles of 300ºC. After the compound mirror

is bonded, it is ready for mounting to the optical bench.

❒ A dolly is used to insert and mount each of the telescope's optics. Precision manipulators built into the dolly reduce the risk of damage due to handling and allow the optic to be finely aligned. Because the telescope-powered optics are on a common optical axis, alignment time is reduced, and testing setups are simplified.

The optical flats require minimal alignment because they have no power and have oversized clear apertures. To facilitate final alignment while the FPA is being assembled and tested, a tooling optical flat is inserted for the FPA.

Final adjustment for the optical alignment is completed by inserting precision shims between the optics flexures and optical bench mounts, as shown in Figure 4-24. The shims are lapped to the required thickness and then attached. A thermally conductive epoxy (Epibond 1210A) is used to lock the shims in place. LMMS has experience using this procedure on several flight missions such as Star Tracker. This consolidated alignment and assembly process reduces the number of steps and expedites the process.

When the FPA is assembled and ready for integration, it is mounted on the structure replacing the alignment flat. An alignment telescope is used to align the FPA reference mark to the optical bench cube to within 51 arcseconds in rotation. FPA focus, lateral translation, and rotational angle adjustments are made using shims. LMMS has experience in using this technique for Star Tracker alignment and calibration.

Alignment and diffraction limited optical performance is verified using both an auto-collimator and an interferometer. The auto-collimator is used with a flat panel screen which projects moving pseudo-star fields onto the focal plane assembly. This technique enables a complete system test and simulated flight response of the optics, FPA, and S/W on the ground. Both entrance pupils are tested to verify the optical system's performance. Eliminating all light sources tests the focal plane assembly dark current. Flat field response is tested using an integrating sphere with uniformity >98% over the exit aperture.

❒ *Test:* Final optical system testing (clear aperture, distortion, wavefront and focal plane align-

Table 4-39. Mirror Specifications

Mirror	Max Mass (kg)[a]	Conic Const.	Radius (cm)	Incident Angle (deg)
Compound	9.59[b]	Flat	∞	20–22
Primary	27.25	-0.977	204.98 cc	3–11
Secondary	1.31	-4.461	87.88 cx	4–16
Fold Flat #0	4.74	Flat	∞	0–4
Tertiary	1.19	-0.617	153.92 cc	4–8
Fold Flat #1	1.12	Flat	∞	28–32
Fold Flat #2	1.75	Flat	∞	5–8
Fold Flat #3	2.84	Flat	∞	5–9
Fold Flat #4	2.69	Flat	∞	9–13

Material: Corning Ultra Low Expansion (ULE) glass
a. After light weighting of 40%
b. For each mirror, there are two compound mirrors

Table 4-40. FPA Window Specifications

Window Surface	Radius (cm)	Incident Angle (deg)
Flat #4 Side	332.74 concave	0–5
CCD Side	335.28 convex	0–5

Material: Schott BK-7, 0.1.27 cm thick

Table 4-41. Optical Component Dimensions

Component	Height (cm)	Width or Diameter (cm)	Thickness (cm)
Compound Mirror	26.92	61.98	10.41
Primary Mirror	59.94	57.91	9.90
Secondary Mirror	19.30	19.30	3.30
Fold Flat #0 Mirror	19.30	19.30	3.30
Tertiary Mirror	29.21	31.24	5.33
Fold Flat #1 Mirror	19.29	18.28	3.05
Fold Flat #2 Mirror	21.34	21.34	3.56
Fold Flat #3 Mirror	25.40	25.40	4.32
Fold Flat #4 Mirror	—	27.94	4.57
Window	—	31.75	1.27

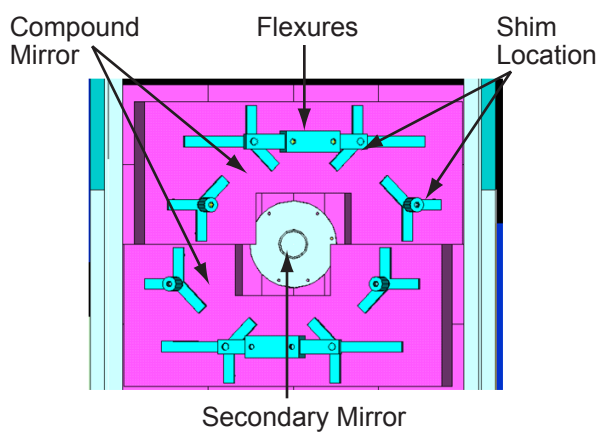

Figure 4-24. Mounting and Alignment of Compound Mirror

ment) is performed using the auto-collimator with the previously described flat panel screen method. The optical axis and optical system alignment is verified using the hard points on the optical bench to align the alignment telescope and auto-collimator. because significant testing is completed and verified during the assembly process, final testing primarily verifies opto-mechanical stability.

4.4.3 Focal Plane Assembly.

4.4.3.1 FPA Design. The improved optics design enables the FAME focal plane assembly (FPA) to take advantage of a flat image plane and reduced central obscuration. The FPA, a large-format CCD mosaic camera, is at the image plane for the optical system's two FOVs. The two FOVs provide the ability to reference stars' positions relative to stars 81.5° away as well as to their neighbors, restricting the growth of random errors for large separations. A design trade study was performed to determine the optimal configuration for the FPA, which is shown in Figure 4-25. The study criteria used were: (1) ease of FPA fabrication and assembly, (2) mounting structure stability, and (3) optical and CCD performance. Changes to the FPA design during the CSR are identified in Table 4-42. Several manufacturers have determined that the new focal plane assembly design components are readily manufactured. The optical system's unvignetted flat image plane permits the CCDs to be freely positioned within a 30.48 cm diameter circle. As a result of the flat image plane, CCD mounting complexity is reduced and reliability is increased. The 24 CCDs easily fit within the 30.48 cm diameter envelope. The remaining unused space reduces the complexity of assembling the FPA by relaxing mounting constraints. Mounting of the CCDs to the FPA requires accessibility for the assembly process. The side wall (cylinder) of the Invar mounting structure is removed, thereby exposing the CCDs. This accessibility enables one or all of the CCDs to be adjusted, removed/replaced, and bonded. Rework and replacement of CCDs using this modular design minimizes integration schedule risk and cost, and prevents damage to adjacent CCDs.

The FPA has been improved by the addition of a window in front of the CCDs. The window performs several value-added functions: (1) control of ground and on-orbit contamination, (2) control of on-orbit CCD temperature, and (3) control of the spectrum transmitted to the CCDs.

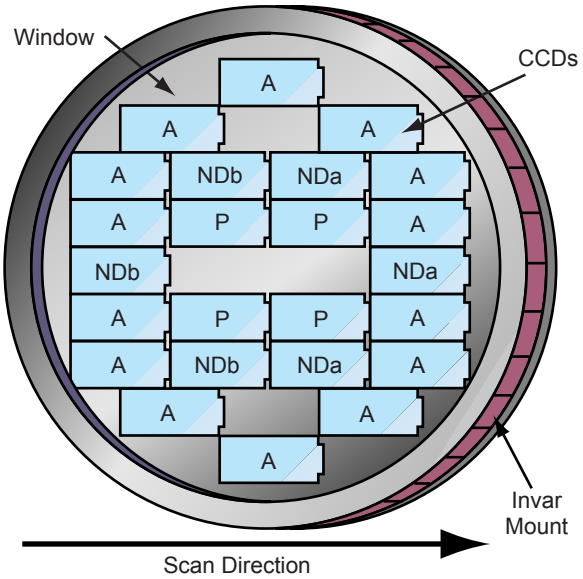

Filter Legend
A-Astrometric NDa - Neutral Density Type A
P-Photometric NDb - Neutral Density Type B

Figure 4-25. FPA CCD Layout

Table 4-42. FPA Design Changes

FPA Changes	Rationale
Window Added	▪ Protects the CCDs from contamination ▪ Improves thermal control ▪ Controls the transmitted spectrum to the CCDs
Sloan filters on glass cover slides	▪ All dielectric coating reduces the complexity of the filters ▪ Fewer components increase instrument longevity
Mechanical support structure	▪ Protects the CCDs from contamination ▪ Provides thermal control

Table 4-43. Low Emissivity Coating

Wavelength	Emissivity
0.9–5 μm[a]	Drop to <0.05 by 5 μm
5–30 μm	<0.05
30–50 μm	<0.15
a. Coating cutoff after 0.9 μm will be optimized in Phase B	

Contamination control of the CCDs is important because particles at or near the focal plane create scatter sites that can affect the star's centroid and mapping data accuracy. Several submicron filters are installed in the Invar mount to allow "breathing" of the assembly between atmosphere and vacuum environments, while preventing particles from contaminating the CCDs.

Table 4-44. Window Risks and Mitigation

Concern	Level	Mitigation
Image shift as a function of wavelength (0.4 to 0.9 μm) due to the windows index, thickness, and light angle of incidence	Low	▪ Shape the window as an equal thickness, equal radius bowl which eliminates image shift ▪ Bowl shape of window does not affect optical design
Reduced transmission to the CCDs as a function of wavelength (0.4 to 0.9 μm) due to window coatings	Low	▪ Coating vendor supplied curves indicate a calculated transmissibility to the CCDs >80% across 0.4 to 0.9 μm (Figure 4-26) ▪ Actual coating performance expected to be >70% due to manufacturing process
Ghost images due to the window's coated surfaces	Low	▪ Ghost images will be present due to the window (Figure 4-27) ▪ Although the ghost images can not be eliminated, they can be predicted, and removed via S/W ▪ Primary ghost images created by the window (1) between window top and bottom surface, (2) between CCD and window bottom, and (3) between CCD and window top have a very low fraction of the incident energy ▪ Ghost energies as a percent of incident energy (and centroid locations from image) have been calculated: (1) 0.07% (364 μm = 24.3 pixels), (2) 0.1% (497 μm = 33.1 pixels), and (3) 0.7% (861 μm = 57.4 pixels)

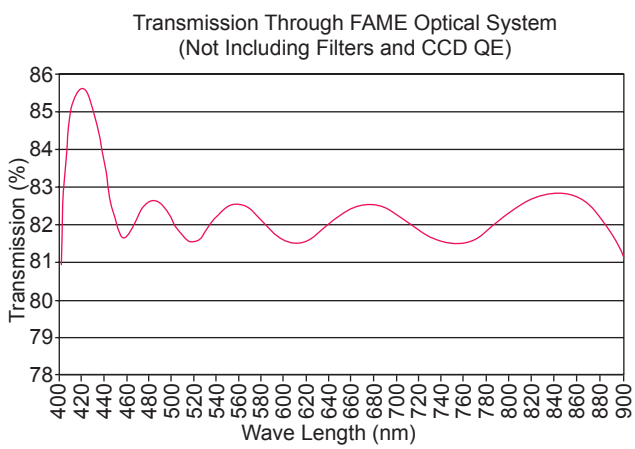

Figure 4-26. Transmissibility

For thermal control, a low emissivity coating is applied to the outside window surface. This coating acts as an infrared (IR) rejection filter, cutting off quickly for a wavelength >0.9-μm, as shown in Table 4-43. The addition of this coating enhances the thermal stability of the CCDs, while minimizing the size and mass of the cooling radiator.

The inside window surface is coated with an anti-reflective (AR) coating that also acts as a bandpass filter. This filter transmits >92% of the required 0.4- to 0.9-μm passband. At 0.910 μm the

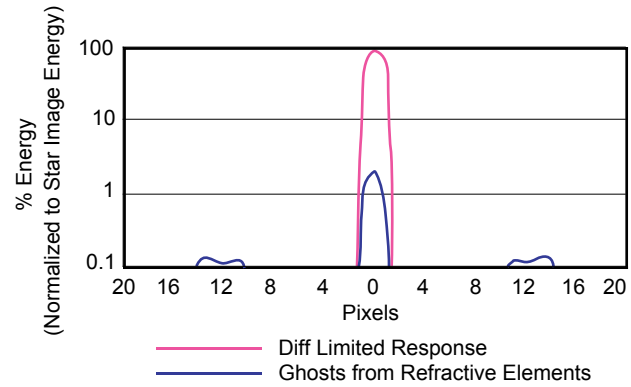

Figure 4-27. Star Energy vs. Ghost Energy (at Edge of Field)

transmission decreases to <10%, and remains low into the near IR where the low emissivity coating becomes effective. At shorter wavelengths, by 0.390 μm, the transmission also decreases to <10%. The filter eliminates short wavelengths, which can have variable QE over time. Risk for both window coatings is low because they are extensions of existing technology used on the GP-B program.

Mission performance requires control of any image shift due to the window, high optical transmission for the window, and accounting for ghost images. An optical system analysis was performed to determine window effects, which are depicted in Table 4-44. This analysis determined that the window, as designed, induces no errors except ghost images, which can be removed during data processing.

Sloan and neutral density (ND) filters as described in 4.4.1, are coated on thin glass slides and mounted to the CCDs using DC93-500. DC93-500 is a low-stress elastomer which LMMS has used successfully on several space instrument programs. Registration of the filters to the CCDs to better than one pixel (15 μm) accuracy can be readily achieved using existing technology. To simplify the FPA, LMMS is exploring techniques to eliminate the thin glass filter slides and apply the filter coatings directly to the CCDs. Several advances in coating technology, such as reduced coating temperatures and zero stress coatings, make this approach potentially attractive.

4.4.3.2 CCD.

❒ *CCD Design:* CCDs enable the FAME instrument to detect and quantify the low-intensity im-

Table 4-45. FAME CCD Requirements and Capabilities

Parameter	Derived Requirement	Remarks	EEV CCD44-82 Capability
Architecture/Process	Triple-Poly, N-Buried Channel, Backside Illuminated, MPP, notch	Processed for Backside Illumination	Needs notch addition
Image Area Format	4096 pixels x 2048 pixels	Full Frame. Will be used in TDI mode	Meets requirements
Gap between adjacent CCDs	Quasi four side buttable		Meets requirements (5.1 mm gap on fourth side)
TDI at clock phase instead of pixel	Array transfer gate		Add array transfer gate
Pixel Size (um)	15 μm x 15 μm		Meets requirements
Fill Factor (%)	100%		Meets requirements
Image Area Pixel Full Well (e-)	≥100 x 10^3	Inverted Clocking Mode	Meets requirements
Vertical Transfer Rate (Hz)	≥10 KHz		Meets requirements
Signal Readout Rate (Hz)	≥3 MHz		Meets requirements
Quantum Efficiency (%) 400 nm 500 nm 600 nm 700 nm 800 nm 900 nm 1000 nm	Backside thinning and AR coating 70% 85% 90% 80% 50% 30% 10%	Measured at between 50% to 75% Full Well (-70˚C)	Meets requirements with addition of AR coating
Conversion Gain (v/e-)	≥2.0 x 10^{-6} v/e-	At between 50% and 75% Full Well (-70˚C)	Meets requirements
Dark Current (-70˚C)	<0.05 e^-/pixel/s	MPP mode	Meets requirements
Readout Noise (e- rms)	≤2 e^- rms @ <50 kHz ≤7 e^- rms @ 135 kHz	-70˚C, Using CDS	Meets requirements
Dark Signal Non-Uniformity (DSNU) (%)	≤10%, 1-sigma	-70˚C	Meets requirements
Photo Responsivity Non-Uniformity (PRNU) (%)	≤5% rms, 1-sigma	From Imaging Area Average, Measured at -70˚C, monochromatic light	Meets requirements
CTE: Vertical Horizontal	 ≥0.99999 ≥0.99999	Measured At -70˚C At 80% ±10% FW	Meets requirements
Linearity(%): From 10% to 100% Full Well	≤5%	FW Def. As Point At Which The Resp. Dev. ≦5% From Straight Line Fit to Resp. Data	Meets requirements
Operating Temperature (˚C)	-80˚C to +120˚C	For Stated Performance	Meets requirements

ages generated by faint stars. The CCD selected for FAME must be radiation tolerant, able to operate in time delay integration mode for optimal sensitivity, and have a form factor allowing close spacing of CCDs on the focal plane. The baselined CCD for FAME is a low risk modification of a proven, catalog-listed CCD, the EEV CCD44-82. The CCD44-82 consists of a 4096 x 2048 full frame CCD, a substrate electrical interconnect fanout, and packaging. For FAME, the EEV device is slightly modified by the addition of notch or microchannel technology for increased radiation hardening, an array transfer gate for TDI readout, and application of a standard anti-reflective (AR) coating for better quantum efficiency. LMMS employed EEV CCDs on its Solar X-ray Imager, which flies on the GOES S/C. Because the modifications to their existing product are minor and routine, baselining the EEV CCD is a low risk approach. EEV also qualified and supplied CCDs for: Viking, Freya, ROSAT, UOSAT, Jet-X, Jet-XAM, XMM-OM, ENVISAT (MERIS & GOMOS), XMM-EPIC, XMM-RGS, and Cubic (SAC-B).

The performance parameters to be met by the FAME CCD, and the capabilities of the existing EEV CCD44-82 are shown in Table 4-45. The EEV CCD, shown in Figure 4-28, is a full-frame device with an image area of 4096 pixel rows x 2048 pixel columns, and two low noise signal readout amplifiers. Each serial register has a summing well before the sense node to allow at least 1x to 20x binning. The pixel image area is 15 μm x 15 μm.

The CCD is backside thinned and buttable on three sides and quasi-buttable (5.1 mm gap) on the

fourth side. It must be modified to incorporate an array transfer gate to enable time delay integration down to the clock phase level and notch technology for greater radiation hardening.

Other CCD manufacturers make devices that, with modifications, will also meet the FAME requirements. Candidate FAME CCD vendors and their flight heritage are summarized in Table 4-46.*CCD Centroiding Verification:* As part of FAME risk reduction, LMMS, with USNO's assistance, is measuring the centroiding accuracy on a flight-like EEV CCD of dimension 2048 x 4096 pixels with time delay integration (TDI).

The experimental apparatus, shown in Figure 4-29, projects a grid pattern of illuminated spots onto the CCD, which is driven in the horizontal dimension by a precise linear stage. The measurement metric for the system is a highly precise grid pattern of 16 spots of 30 μm diameter. The spots are transmissive microlithographic holes in chrome coating of optical density 5. The grid pattern is constructed 3 times larger than the actual illuminated pattern on the CCD. The pattern is threefold demagnified by using a collecting lens of 300 mm focal length, followed by a focusing lens of 100 mm focal length. Between the lenses is a blocking aperture, which is f/30 in the TDI dimension and f/60 in the orthogonal dimension.

These f/#s are varied by changing the blocking aperture size. The optical performance of the dual lens and f/stop system has been verified to be diffraction limited even for f/5 sized stops. The grid pattern is illuminated by a diffuse white light source comprised of a 1-mm-diameter fiber optic followed by a collimating lens and an opal glass diffuser. The light source is a DC driven tungsten lamp focused into the fiber. Better than 1% stability has been demonstrated for this system, substantially better than the test requirement of 5 to 10 percent. Attenuation is accomplished at the input end of the fiber. The experimental centroiding verification will take place on a vibration-isolated table in a LMMS thermal vacuum chamber held at room temperature. A cold strap from the thermal I/F of the CCD to a liquid nitrogen cold pot will cool the CCD.

The CCD and electronics will be precisely translated to simulate flight motion, although the motion requirements are minimized by the small

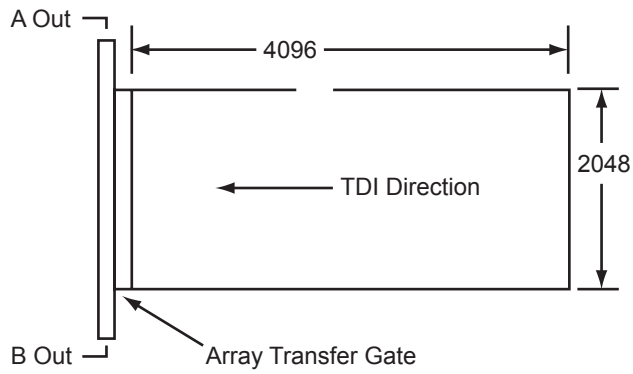

Figure 4-28. FAME CCD Schematic

Table 4-46. List of Candidate CCD Vendors

CCD Vendor	Flight Heritage	FAME Modifications
EEV	AXAF	Notch, array transfer gate, AR coating
LMF	TRIANA, LMMS Autonomous Star Tracker[a]	Modified 4 K x 4 K 3-side buttable summing well (LMF CCD 485)
STA[b]	WFPC, LIS, OTD, Cassini, Forte	Modified 4 K x 4 K 3-side buttable summing well (LMF CCD 485)
MIT Lincoln Labs		Evolutionary development

a. Fab
b. Formerly LMF Tustin

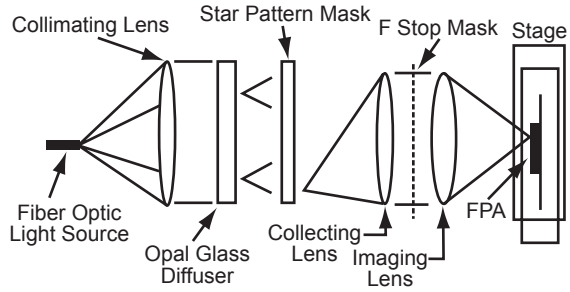

Figure 4-29. CCD Centroiding Experiment

row separation of the grid pattern. Irregularities in stage motion are identical for each row of four spots and are averaged by the long 4096 TDI integration. A frame grabber and PC data collection system will capture the CCD data. The US Naval Observatory will analyze the captured images.

4.4.3.3 FPA Fabrication, Assembly, and Test.

The FPA is designed to facilitate low-risk fabrication, integration, and testing using standard processes that have been proven on previous LMMS flight missions. Table 4-47 shows the risk levels associated with critical focal plane assembly processes, and their mitigations. The assembly is designed to be optomechanically stable from

Table 4-47. Risk Levels and Mitigation

Risk	Level	Mitigation
ESD handling of CCDs	Low	▪ ESD workstation for handling CCD ▪ All fixtures and mounts are electrically grounded
Precision cleaning of CCDs	Low	▪ Special cleaning process at vendor ▪ Sub-micron contamination verification at LMMS ▪ Handled in cleanroom
Precision mounting CCDs	Low	▪ Fixtures to minimize handling ▪ Use RTV bonding
CCD bonding	Low	▪ Use low stress, non-conductive RTV bonding ▪ Low stress fixtures
CCD testing	Low	▪ Verify all CCD functions prior to and after mounting ▪ Standard test and equipment
Stress free window mounting	Low	▪ Use low stress elastomer ▪ Mounting structure designed to not apply forces on window over temperature range

mechanical, environmental, and thermal variations. This stability allows the FPA to produce accurate star mapping data throughout the mission life.

❒ *Fabrication:* Each of the FPA components is designed to be readily manufactured. The fundamental focal plane assembly components are the window, mounting structure, CCDs, and micro-filters as shown in Figure 4-31. Refer to Section 4.4.3.1 for details on the window. The mounting structure is made from Invar which is identical to that used in the CCD packaging. This eliminates thermally induced stresses due to a CTE mismatch between different materials. The CCDs are fully screened, burned-in, and thermally cycled at the vendor's facility. Each CCD is then characterized at LMMS before installation into the focal plane assembly. Micro-filters are used to allow the FPA to "breathe" when going between atmosphere and vacuum environments, and to control contamination as the focal plane assembly is returned to atmospheric pressure.

❒ *Assembly:* The FPA is assembled, as shown in Figure 4-30, in parallel with the optical system to reduce the schedule. All assembly work is done in a cleanroom with electro-static discharge (ESD) control stations. The elastomers and bonding compounds have been selected for their structural and vacuum properties, and have been used by LMMS on previous space missions.

To minimize handling, fixtures are used to position and align the Sloan filters and CCDs. The Sloan filters are registered and bonded to the

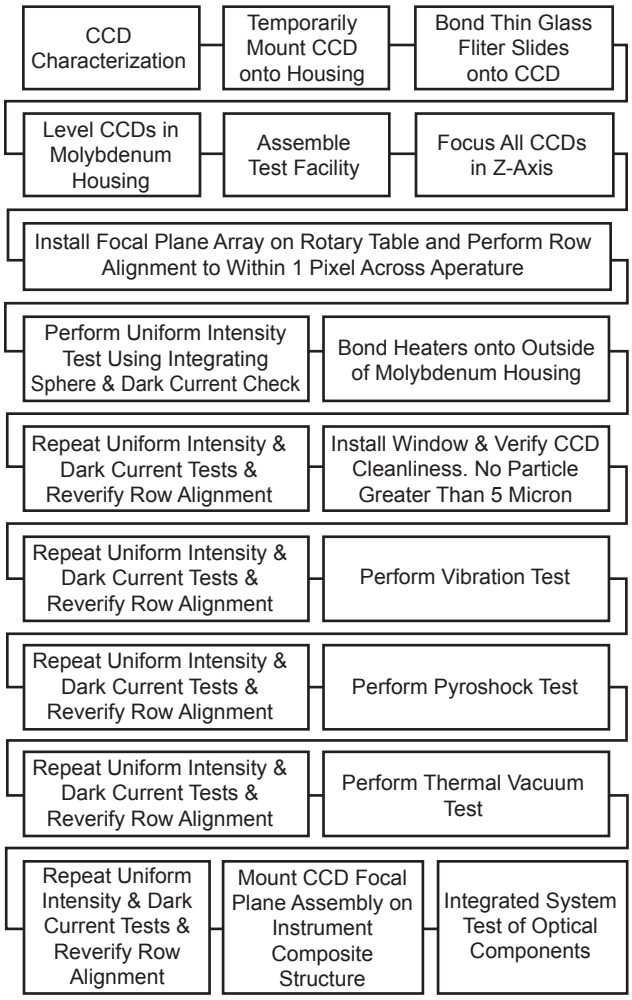

Figure 4-30. CCD Focal Plane Assembly

CCDs to an accuracy of less than one pixel (15 μm). Bonding the Sloan filters eliminates registration drift over the mission lifetime. The room temperature vulcanization (RTV) compound used for bonding is low stress and durable but can be removed if necessary without damaging the CCDs. The fixtures used to position and align the CCDs can adjust 6 degrees of freedom. This fixture type was used for the GP-B program, with a demonstrated repeatability of <0.003 milli-radian. The CCDs are aligned to the requirements shown in Table 4-49 using the fixtures and a scanning microscope. Each CCD is aligned to <0.25 milliradian to each other and to the mount structure's central reference mark, which is aligned to the optical bench cube once integrated. Height adjustments of the CCDs are performed using a microscope attached to a precision translation stage, and

Table 4-48. Instrument CSR Design Summary

Instrument Updates	Requirements	Concept Study/Implementation	Trades/Risk Reduction
Structure redesigned to support 15m focal length optical design	▪ High passive stability ▪ Stiff Structure to support optics ▪ CTE matching of ULE to within 100ppb at 20˚C ▪ Fit within shroud dynamic envelope ▪ Light weight design	▪ M55J/9543 is a high modulus graphite cyanate whose CTE matches ULE to within 50ppb at 20˚C ▪ All elements fit within envelope ▪ Masses estimated using aerial density provided by COI	▪ Single structure versus removable side panel design ▪ Single structure design selected to provide greater stiffness and reduce risk of instability
Aperture Covers added to baffles	▪ Optics clean to MIL-STD-1246 level 100	▪ Aperture Cover added to model	▪ Procure assembly from subcontractor or design and assemble at LMMS ▪ Selected outside procurement to reduce cost and schedule risk
Star Trackers mounted on optical bench	▪ Point in same direction as compound mirror's line of sight	▪ Star Trackers added and aligned to line of sight ▪ Optical cubes added for alignment of tracker and instrument to S/C	▪ Optimize Star Tracker mounting ▪ Star Trackers mounted on opposite sides to balance c.g., and located near end of instrument baffles
Electronic Box layout revised	▪ Generate realistic mass estimate and volume ▪ Locate close to focal plane assembly	▪ Modeled using 3.81 mm thick aluminum walls for radiation shielding ▪ Used latest board sizes and estimated equivalent masses	▪ Optimize electronic box mounting ▪ Boxes mounted on opposite sides to balance c.g., and provide clear view to space for heat transfer
CCD Assembly Layout Detailed	▪ Ensure geometric compatibility with optical field of view ▪ Populate center of array due to no center obscuration of field of view	▪ Layout of 24 EEV CCD successful ▪ Detailed mounting of window and thermal link added to provide accurate volume and mass estimate	▪ Use Invar or molybdenum for CCD housing ▪ Selected Invar housing because CCD base is Invar and eliminates CTE mismatch
Mirror Mount Flexures modeled with more detail	▪ Generate realistic mass estimate ▪ Verify instrument design will fit within shroud envelope	▪ Kinematic mounts modeled and incorporated to assembly	▪ Procure mounts w/optics or LMMS to design and fabricate mounts ▪ Selected procurement of mounts w/optics to reduce cost and schedule risk

focused on the CCD. An optical encoder attached to the stage gives a height resolution of 4 μm when combined with the microscope. This resolution is substantially better that the 940 μm CCD height range requirement to maintain diffraction-limited performance.

Verification test of the assembly is performed using an auto-collimator with a flat panel display that projects moving star fields, and an integrating sphere for flat field illumination. The functionality of the focal plane assembly is tested by projecting an artificial star onto each CCD, using the auto-collimator. Data acquisition with TDI is used to check the gain at 20%, 50%, and 90% of full well. Dark current and dark field responses are measured by removing all light sources to the CCDs. These tests can be performed in process, enabling continuous system verification, which eliminates costly rework. Both the auto-collimator and microscope alignment techniques have proven heritage from LMMS Star Tracker programs.

❒ *Test:* System testing of the focal plane assembly repeats the same measurements performed in the integration process. By testing the FPA as it is assembled, final testing only verifies the stability of the assembly. Verification of the integration and test processes and procedures are performed on the FPA engineering unit.

Table 4-49. CCD Alignment Requirement

Alignment	Requirement
Distance between CCDs in scan direction (x-axis)	5.1 mm
Distance between CCDs in y-axis	50 μm
Alignment over 1 CCD row	15 μm

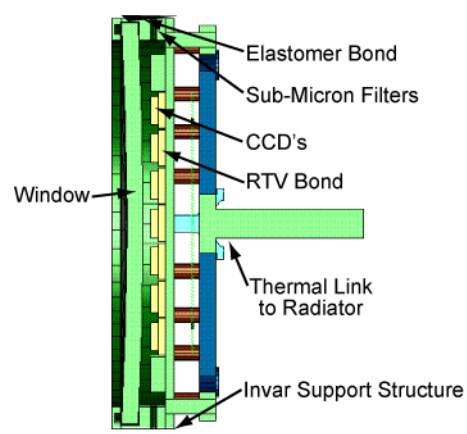

Figure 4-31. Layout of FPA Assembly

4.4.4 Instrument Structure.

4.4.4.1 Instrument Assembly Design. The instrument assembly design for the FAME instrument meets all technical requirements. Table 4-48 identifies the design and implementation changes that occurred in the concept study, as well as the trade studies and risk reductions that supported the changes.

This section provides an overview of how the instrument elements I/F with each other., and it describes subcontractor contributions in the areas of structures, optics, and mechanisms, and how their relevant flight experience and performance history, reduce schedule risk and program cost, and achieve mission success. The composite structure, fabricated by Composite Optics Inc., is composed of an optical bench with integral side, end and top panels that hold the compound, primary, secondary, tertiary, fold flat mirrors and the CCD focal plane assembly in place. Foldout 4 shows the location of all instrument components in the assembly. The compound mirror assembly is supported by an "X" shaped graphite cyanate structure mounted to the optical bench and end panel. The primary mirror and fold flat #0 are supported by an internal vertical panel that provides structural support and acts as a secondary stray light barrier for the CCD focal plane assembly. The secondary mirror is mounted to the compound mirror support structure through a square opening in the center of the compound mirror. The tertiary mirror is mounted to the composite structure end panel located opposite the compound mirror support panel. Fold flats #1 and #3 and the focal plane assembly are mounted to the composite structure top panel. Fold flats #2 and #4 and the integrating sphere are mounted to the optical bench as shown in Foldout 4. The optical elements are mounted to the structure using flexures designed by Raytheon Systems Company. Because the flexures are fastened into grooves in the graphite cyanate structure, they are prevented from rotating or shifting under launch loads. The flexures bolt into mounts that are bonded into the back sides of the lightweighted mirrors. The CCD focal plane assembly consists of an Invar housing, Invar cover plate, BK7 window, titanium flexures, and 24 CCDs. The Invar housing provides radiation shielding on three sides, while the BK7 window provides radiation shielding on the fourth. Electrical connections to the CCDs are made with pinouts through the Invar housing to a board mounted directly above the housing. From there, cables run to the analog processing electronics boxes located next to the CCD focal plane assembly on the top composite panel.

The CCD focal plane assembly must be maintained at a temperature of less than –70°C. Operating at this low temperature minimizes dark current and degradation from radiation effects. This cooling is achieved by isolating the focal plane assembly from the composite structure, and by mounting a radiator outside the instrument to dissipate heat. The focal plane assembly is mounted to, but isolated from, the composite structure using titanium bipods. The focal plane assembly is cooled by a thermal link that connects the Invar housing to the radiator through flexible copper ropes. Actively controlled resistive heaters are included on the focal plane assembly to regulate the focal plane to ±63 mK. Attached to the side panels of the structure are two aluminum baffles, which are coated black to reduce stray light. At the end of the baffles are structural supports that bear the masses of both the baffle and the aperture cover. The aperture covers are installed at the end of the baffles to prevent particulate contamination during testing and launch, and CCD damage if the entrance aperture is pointed at the Sun during S/C insertion into orbit. The aperture covers are spring-loaded and fitted with latches to hold them in the closed position before and during the launch phase. Following insertion into orbit, the doors are left closed for a period of several days to allow the S/C and instrument systems to outgas. Once outgassing and the S/C and instrument checkout phases are complete, the latches are released, allowing the covers to open. They remain fail safe in this position for the remainder of the mission. Mechanisms of this type are simple and reliable and have flown many times. The redundant latch actuators ensure that the doors open on command. Our baseline design calls for hermetically sealed paraffin-based actuators, which are reusable and may be tested on the ground. For ground testing of the cover and vacuum testing, a non-flight attachment is planned that can re-close the covers. The present aperture cover design is based on an aperture cover being fabri-

cated for the TRIANA program by Starsys Research.

The data processing and control electronics box and the CCD control electronics box are mounted to the optical bench with titanium flexures, and heat sunk using flexible copper ropes. Cabling from the data processor electronics box and CCD control electronics box is routed from the optical bench along the outside of the composite structure to the analog processor electronics boxes mounted on the top panel of the structure. The two S/C star trackers are mounted on the instrument optical bench in line with each of the compound mirror lines of sight. The star trackers provide initial instrument coarse attitude at the start of instrument acquisition. Each star tracker is mounted to the optical bench with titanium flexures and heat sunk using flexible copper ropes to accommodate for the CTE differences between the star tracker aluminum mounting bracket and the graphite cyanate optical bench. Optical cubes are mounted to the optical bench to provide a reference for each star tracker optical axis and the compound mirror's lines of sight. The optical cubes provide an alignment reference during star tracker installation on the optical bench and for instrument alignment on the S/C.

LMMS identified all component I/Fs while reducing schedule and cost risk by subcontracting work in three areas. The first subcontract covers the composite structure design and fabrication at COI. The second subcontract covers the optical elements and flexures fabrication at Raytheon Systems Co. The third subcontract covers the aperture cover assembly design and fabrication at Starsys Research. LMMS coordinates the overall design effort together with the detail design of the CCD focal plane assembly, S/C mounting flexures, baffles, and electronic boxes and instrument assembly drawings. During the CSR, the masses for the instrument assembly were updated, and a 20% contingency was added. The instrument mass estimate increased from 165 kg to 191 kg without contingency, and the new mass estimate with contingency is 229 kg. The 191 kg mass estimate is a result of modeling all components with greater detail. For example, the electronic box masses were calculated using actual electronic board sizes and quantities, estimated fully populated electronic board densities, and 3.81 mm thick aluminum enclosure wall thickness. Due to the greater accuracy of the new mass estimate, the 20% mass contingency should account for any mass increases that occur during detail design. Projected masses for the instrument are listed in Foldout 4.

4.4.4.2 Structure Design and Fabrication. The instrument composite structure meets the instrument requirements for thermal, mechanical, and optical stability, listed in Table 4-48, by providing a stiff structure with a low CTE of 50 ppb per degree at 20°C to match the CTE of the ULE optics. The composite structure is to be fabricated using proven fabrication techniques by COI. No new technologies are required to successfully fabricate the composite structure. All structural elements are made of M55J/9543 graphite cyanate (GrCyn) material produced by Fiberite for COI. This material is a high modulus graphite combined with a cyanate ester resin system that has been qualified on numerous space flight programs, including AXAF and MODIS. Precise CTE matching to ULE was demonstrated (at 35°C and low temperatures) as part of the Next Generation Space Telescope (NGST) prototype primary mirror demonstrator. COI's past performance in this area reduces program cost and schedule risk. The optical bench, side, end and top panels, which support the optical elements, are constructed using 2.5 mm top and bottom composite laminate facesheets bonded to an internal rib structure core. The core consists of graphite laminate discreet ribs that interconnect to form an egg-crate pattern. Ribs are located only where required, which yields the highest stiffness to mass ratio. All composite components in this construction are cut from flat graphite laminate, and the components are bonded together using epoxy adhesive. I/F fittings for mounting optical mirror flexures, electronic boxes, baffles, and star trackers are titanium. These fittings are bonded directly to the underside of the facesheets to efficiently transfer shear loads and bond to the internal ribs in a double lap shear configuration. Each enclosed volume is vented with a minimum of two 6.35 mm diameter holes per nominal cavity. These holes are located for optimal cleaning, tool insertion, access and fluid drainage. The side, end, and top panels are fabricated integrally with the optical bench to optimize struc-

tural stability. Access doors in the side and top of the structure facilitate installation, removal and alignment of all optical elements and the CCD focal plane assembly. The compound mirror support structure is fabricated from the same graphite cyanate material. It is designed to be removed from the optical bench to allow for external integration and testing of the compound mirror. To verify the stability of the 81.5 deg angle between sections of the compound mirror, an additional compound mirror support and section of optical bench are being fabricated for verification testing. The objective of this test is to verify the results of the thermal/mechanical model by creating the predicted thermal gradients and measuring structural deflection. The induced temperature gradients are scaled to allow the deflections to be measured. This compound mirror support also acts as proof of design and fabrication. The inside of the structure is black painted to minimize stray light. Before installation of the optical elements, the assembly will be precision cleaned and baked out as shown in Figure 4-32.

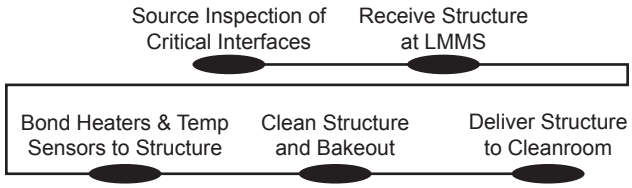

Figure 4-32. Structure Assembly

4.4.5 Electronics And Data Processing.

4.4.5.1 Electronics and Data Processing. The electronics have 48 channels to amplify, condition, and digitize the very low noise, low amplitude star data from the FPA's 24 CCDs. The CCD pixels that are digitized, corresponding to windows containing the star data, are determined by the star catalog that resides in non-volatile memory in the data processing electronics. The output from the Analog to Digital Converters (ADCs) is then serialized and sent to the data processing electronics via high-speed fiber optics links. The digitized data are packetized and made ready for the output I/F in the data processing electronics. The CCDs are controlled and clocked from signals generated in the CCD control assembly. Instrument thermal control and power conditioning also resides in the CCD control assembly (Figure 4-33).

❒ *Input Catalog:* During the concept study, we investigated the options of using 1) an input catalog to select FAME targets, 2) thresholding to select stars in the proper magnitude range, or 3) a combination of thresholding and input catalog.

In catalog-based extraction, the FAME instrument uses an on-board catalog containing 40 million stars to identify stars in the fields-of-view before each TDI row readout. Using this information, only the pixels containing star data are digitized, thereby reducing the ADC power consumption and the data throughput rate between the Analog Processor Assembly and the Data Processor and Control Assembly. In addition, binning is controlled to center each star in its 20-column bin orthogonal to the TDI direction, instead of having fixed bins with the possibility that a star could straddle two bins. Some selected ninth magnitude stars are not binned but are read out as individual pixels and sent to the instrument computer for position and TDI rate acquisition and tracking. All other stars are binned and the windows are sent directly via the quad high-speed serial data I/F to the S/C. CCD rows without star windows are charge-flushed, further reducing the data processing load. In the threshold-based extraction, each 20 column bin is digitized and compared to a fixed threshold level. If a bin is found to exceed the threshold, a surrounding window of 10 rows, each with a single 20 column bin, is extracted and sent to the Data Processor and Control Assembly electronics. Stars that exceed the threshold for more than one 20 column bin have a correspondingly larger window returned. All data are processed in the instrument computer to determine which stars are bright enough to be used for position and TDI rate acquisition and tracking calculations.

Our trade study showed that catalog-based extraction is easier to implement, uses simpler electronics, and is lower risk than threshold-based extraction. The trade between catalog and threshold-based extraction is summarized in Table 4-50.

The input catalog is generated in cooperation with the Science Team. The 1 sigma accuracy needed is 100 mas, which is easily attained using USNO catalogs. The input catalog is organized into 40,910 rectangular tiles (~1° x 1°). The catalog tiles are stored in EEPROM memory with 64 bits per star totaling 2.8 Gbits (64 bits/star x 4x106

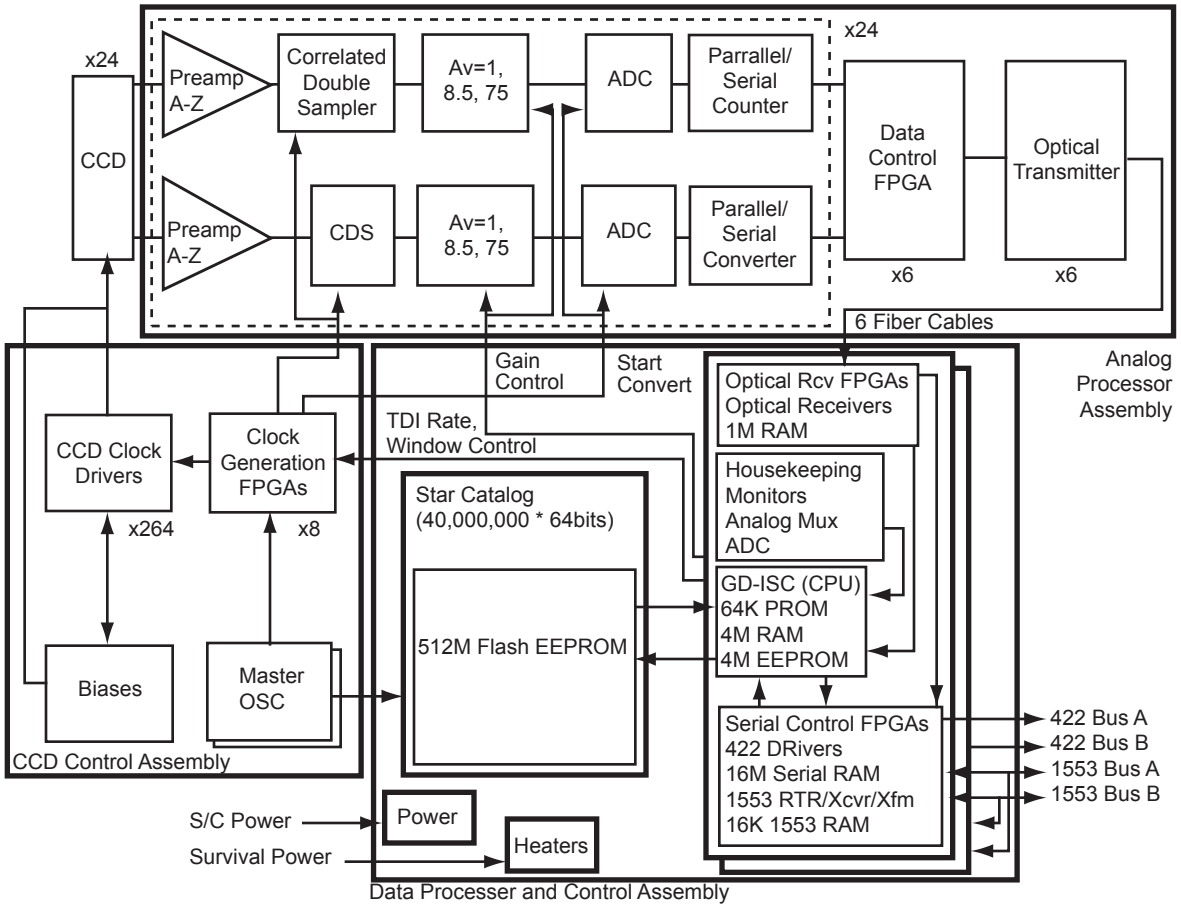

Figure 4-33. Instrument Electronics Block Diagram

Table 4-50. Trade Study Shows Clear Advantage for Catalog Vs. Threshold Based Extraction

Requirement	Catalog	Threshold
ADC range	Three selectable gain ranges permits the use of 48 12-bit ADCs. Gain for each star is stored with the star data in the on-board catalog	Requires the use of 48 17-bit ADCs or 3 12-bit ADCs per CCD half for 144 12-bit ADCs total
ADC power	ADCs and remaining Data Processor electronics run only 0.2% of the time	All pixels must be digitized
Instrument computer requirements	Only one computer required	Four computers required
Downlink data	Pre-determined maximum amount of downlink data	Increased requirement especially in the galactic plane
Data rate for Earth/Moon/planets	Rate is the same if looking near/at the Earth/Moon/ Venus/Jupiter	Very high data rate when looking at/near Earth/Moon/Venus/Jupiter
Bright object rejection	Detects stars much closer to the edge of Earth/Moon/Venus/Jupiter	System is “blinded” near the Earth/Moon/Venus/ Jupiter
Targets of opportunity	Must be uploaded to star catalog to be observed	Detected automatically if object exceeds threshold
Fiber optics	Fewer fiber optic links	Greater number fiber optic links to handle the increased CCD to Data Processor data requirement
Pixel defects and radiation	Ignores pixel defects and radiation hits unless the event overlaps a star	Records all pixel defects and radiation hits as data
For purposes of the Trade Study, the shaded column is preferred		

stars + 10% contingency + 1% overhead). For each star, the position, window size, binning, and brightness are stored. The selection of a GEO orbit, which allows uplink at 2 kb/s continuous, facilitates easy updates to the catalog. Each catalog tile will have an associated checksum. If the on-board checksums do not match, the mission operations center is signaled, and a replacement tile is uplinked. The majority of single event upsets (SEUs) typically occur only during write operations in EEPROM, the radiation environment for the FAME orbit is relatively benign, and the uploading of corrected tiles is fairly easy. For those reasons, we concluded that only one copy of the catalog needs to be stored on board. To simplify the processing required on board and to reduce the storage requirement of the input catalog, we chose not to include proper motion information in the catalog. Only a few tens of thousands of high proper motion stars and minor planets will change positions significantly over the lifetime of the mission. The catalog will be loaded into the instrument before launch and updated periodically to correct for high proper motion targets and for SEUs, and to modify the catalog based on scientific criteria by the mission operations center.

Because the checksums are stored by tile rather than by star, when a portion of a tile needs updating the entire tile is uploaded to the S/C. From simulations using the 45,499,445 stars in the USNO-A2.0 catalog with $5 < m_V < 15$, we calculated that an average tile has 1100 stars and the most dense tile potentially has 11971 stars. Even for this worst case, less than 8 minutes are required to upload the entire tile at 2 kb/s. The FAME on-board catalog is carefully populated based on several criteria:

❒ The scientific importance of the object,

❒ The downlink data rate as a function of time, and

❒ Data contamination due to confusion in the galactic plane and core.

We decided not to compress the on-board catalog due to the limited reduction in catalog size and the additional processing power required for decompression.

❒ *Data windowing:* The unbinned readout rate of the 48 CCD halfs on FAME would be 2.7 MHz, making it costly to telemeter every bit from the FAME CCDs. Thus, only data windows around each of the target stars are sent to the ground, and these data are binned on-chip in the cross scan direction. These windows are nominally 10 x 20 pixels and are binned to 10 x 1. However, the star catalog contains the window size and bin size for each star, so the bin and window size can be varied for double stars and other special cases.

❒ *Data rates:* The downlinked science data rate from FAME is a function of the scan attitude. Candidate FAME target stars are concentrated in the galactic plane and in particular towards the galactic center, thus the FAME data rate varies as FAME rotates and precesses. A 4 Gbit Solid State Recorder (SSR), provided as part of the S/C bus and operating as FIFO data storage, is used to even out the data rate as FAME rotates.

Several instrument packetization/header schemes were discussed during the CSR and a final selection will be made in Phase B. Our current baseline is described here. The data packet for each TDI time step contains 32 bits of header information (synch, line ID, and checksum) followed by a header and data word for each star packet extracted. The nominal TDI rate is 2618 kHz (rows/s) and the row header size is 32 bits, resulting in 84 kb/s of row header. The star packet contains a 32 bit or 16 bit header followed by a 16 bit data word. The 32 bit header (CCD half ID, start column, number of columns, bin size, gain) is used for the first of the 10 rows of star data while a 16 bit header (CCD half ID, start column) is used for the other 9 rows. The number of bits per star is 11x16 header bits and 10x16 science data bits for a total of 336 bits/star. With an average star rate of 822 stars/s, we have an average data rate of 360 kb/s. This scheme is very conservative as to header information. We believe we can optimize the FAME scientific return by increasing the science data to header ratio with minimal risk. Clearly, when FAME scans through the galactic plane, the data rate is potentially much higher than average. One of the most important advantages of catalog over threshold-based extraction is the ability to selectively populate the star catalog to achieve the desired data rate. We could include a flag in the catalog to indicate which stars should be observed when both FAME apertures are rotating in the galactic plane to maximize scientific return. Addi-

tional studies will be performed during Phase B to further optimize the formatting of the science data stream.

❒ *Instrument Data Processing Functions:* Instrument data processing is split into five main tasks: star field acquisition and tracking, star window determination, data collection, commanding, and housekeeping.

The instrument compensates for variations in S/C motion by measuring and tracking the S/C rotation rate and adjusting the TDI rate. When the instrument is initially turned on, FAME uses the external readings of the star tracker to determine an initial position, and approximate rotation rate and corresponding TDI rate, and then proceeds into acquisition mode. In acquisition mode, four 9th magnitude stars are selected from the star catalog. These stars cross those CCDs with the largest separation in the TDI direction (the four CCDs furthest to the left and right in Figure 4-25). A 600 x 600 pixel star image of each star is requested by the computer from the first CCDs. Approximately 4.5 seconds later, these stars cross the CCDs at the opposite end of the focal plane and a second group of 600 x 600 pixels is requested. Because the initial TDI rate will not exactly match the rotation rate, the star images will be blurred in the scan direction. The "time of flight" of the blurred star images across the focal plane will be calculated by the instrument computer to determine the S/C rotation rate, and the TDI rate is refined. This process is iterated with the new TDI rate until the star images match the optical PSF and the residuals between the actual and calculated TDI rates drop below a set threshold. Once the initial TDI rate has been verified, the science mode can begin. To maintain the required accuracy in the science data, the TDI rate can be adjusted approximately once per second using a method similar to acquisition but with 10 x 20 pixel windows. Star window determination requires data to be extracted from the star catalog and logically mapped onto the CCD array. The star catalog is tiled using groups which are approximately 1° x 1° to minimize the total calculations required each second. Because the current attitude and rate are known, the upcoming tiles are extracted, trailing tiles are discarded, and stars within the fields of view are then determined. For each upcoming second, each star is mapped to a CCD half, and the appropriate 10 readout lines, 20 readout columns, column bin size, and an ADC gain level scaled to on the star's brightness.

Data collection is performed by passing the information from the star window determination to the CCD control subsystem. This subsystem uses the current TDI rate with the on-board catalog to extract the raw data within the star windows. Once the raw data are available, position information is added in headers, and the data are sent directly to the S/C serial data stream. An exception is the four stars per second used in TDI calculations, which are sent to the computer. Commands into the instrument include time, star tracker attitude, heater setpoints, and star catalog updates. The capability to patch and re-upload flight S/W is provided. A housekeeping packet is generated approximately once per second. This packet contains all instrument temperatures, voltage monitors, statistics, command status information, time, TDI rate, updated attitude, and processed data from the TDI stars. This packet is added to the science data stream, and is also available on the 1553 bus for internal S/C operations.

❒ *Design Description:* The FAME electronics consist of three distinct subsystems. The first subsystem is Data Processor and Control, which contains the primary S/C I/Fs, power converters, control computer, and the 40 million star catalog database. The second subsystem is CCD Control, which contains the camera controllers, bias drivers, and master system clocks. The third subsystem is the camera, which includes the focal plane assembly, FPA thermal control, and the Analog Processor electronics, consisting of pre-amplifiers, double correlated sampling circuitry, and ADCs.

The Data Processing and Control electronics is composed of 10 daughter boards. Low-voltage power converters, power monitors, and power conditioners are located on the power board. This power board incorporates built-in redundancy, such that the primary S/C power will enable the "A" side of the data processing subsystem and the secondary S/C power will enable the "B" side. If both are turned on, only the "A" side will be used. Two computer boards (CPUs), one on each of the "A" and "B" sides, are used as the primary on-

board data processing control. These CPU boards are General Dynamics Integrated Spacecraft Controllers (ISC), which can process 240 million instructions per second. S/C data communication will be accomplished using the Serial Input/Output (SIO) board. The SIO board contains an internally redundant 1553 I/F used for instrument commanding and housekeeping data transfers, in addition to "A" and "B" side Quad High-Speed Serial (HSS) I/Fs for the transfer of science data. Also, the SIO board contains the data links to the CCD control subsystem, including fiber-optic links from the camera electronics as well as housekeeping monitors for system temperatures, voltages, and other diagnostic information. The final six boards contain the star catalog's Solid-State Recorder (SSR) with half of one board containing the SSR control electronics and the remaining board sides having 48 megabytes of non-volatile EEPROMs per side. One SSR board side can accommodate about 5.5 million stars, providing a maximum catalog size of approximately 60 million stars. This is enough storage for the initial star catalog of 40 million stars, and allows for future expansion and provides additional space in case of memory failures.

The CCD Control electronics consists of eight boards. The first board contains the master oscillators (OSC) for the "A" and "B" sides of the data processing subsystem and the fiber-optic data links to it. Appropriate divisions of these oscillators control the power converters, CPU boards, 1553 and HSS clocks, and all camera clocking. This reduces noise throughout the FAME system and improves the accuracy of the science data. Camera Control electronics (CAM) are on the next two boards. These boards receive their instructions from the CPU board on the data processing subsystem, and control each CCD in the array. Only pixels within each star window are processed. Once the raw data are available from these windows, additional position information will be included and all of the data are sent to the data processing subsystem. The remaining five boards contain the bias converters [BI1, BI2, BI3] and clock driver circuits [CL1, CL2] required to operate the 24 CCDs.

The Analog Processor electronics consists of a very low noise preamplifier, a correlated double sampler, a precision programmable gain stage, an analog to digital converter, a parallel to serial converter, an FPGA and fiber optic link (see Figure 4-33). The analog processor first pre-amplifies by two the CCD output. It then samples both the baseline and signal level in the correlated double sampler, and subtracts the baseline from the signal. Only the very low noise signal remains. The signal is amplified again by the programmable gain stage. Next the signal is digitized by the ADC to 12 bit accuracy, serialized and fiber optically transmitted to the Data Processor and Control electronics. The analog processor is able to change gains to accommodate the large range of star intensities by incorporating the programmable gain stage (PGS). The requirements and gain ranges for the PGS are given in Table 4-51. The gains listed are based on a CCD conversion gain of 2 mV/e- and a preamplifier voltage gain of 2. The PGS and known star intensities allows the use of proven, available, radiation tolerant, 12-bit, A/D converters.

Table 4-51. PGS Gain for 3 Volt ADC Input

Maximum Signal	Gain
750,000e-	1
86,000e-	8.5
10,000e-	75

4.4.5.2 Electronics and Data Processing Fabrication, Assembly, and Test.

❒ *Fabrication:* The FAME electronics are manufactured to LMMS specifications that have been reviewed and approved by NASA's GSFC for use on other NASA missions including the Microwave Anisotropy Probe (MAP), Earth Orbiter 1, and IMAGE. Printed circuit boards are manufactured by LMMS approved vendors. Printed circuit card coupons are sent to GSFC for coupon testing if required. If the contract does not require coupon testing by the customer, the coupons will be tested at our Sunnyvale facility.

Whenever feasible, surface mount technology is used to reduce assembly cost and decrease assembly time. This requires structural/thermal analysis, but it decreases expenses overall. In addition, we use outside vendors for PC board assembly. A SDB (small disadvantaged business), ION Corp. is the selected vendor approved for board assembly. All rework is done in-house by NASA and/or LMMS certified assemblers.

❒ *Assembly:* The CCD assembly into the Focal Plane Array is performed in a class 100 clean

room, ensuring a highly sterile environment for assembly.

❒ *CCD Test:* The CCDs are tested by the vendor before delivery to LMMS. In addition, they are retested and evaluated at LMMS. Each CCD is characterized in a test camera for proper operation. This involves optimizing the CCD clock amplitudes, both positive and negative, the CCD bias amplitudes and measuring the output amplifier conversion gains.

❒ *Electronics Test:* The FAME instrument electronics are assembled and tested as shown in Figure 4-34. The electronics testing is first performed at the board level to assure that no damage will occur when the board is connected to other parts of the instrument. Once board-level testing is complete, board-level components are added to the system, one at a time, until the instrument is built up. Board-level test S/W is used whenever needed to test functionality. The great number of functional tests performed throughout fabrication and assembly ensure that electronics and data processing reliably meet requirements.

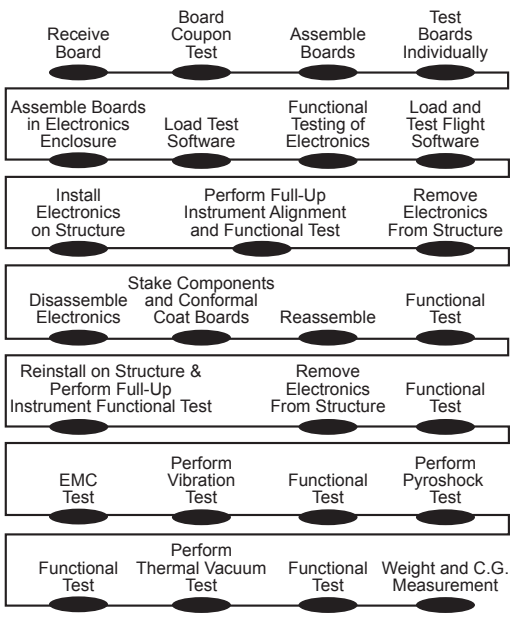

Figure 4-34. Electronic Assembly

4.4.6 Thermal Design and Analysis. The critical functions of the thermal subsystem are to ensure the focal plane temperature is <-70°C and that temperature variations within the instrument do not cause unacceptable thermal distortion in the optical subsystem. This is achieved through a combination of passive and active thermal control concepts.

4.4.6.1 Thermal Design Improvements and Performance. Improvements to the optical design have enabled improvements to the thermal design that delivers enhanced structural integrity through a streamlined, straightforward approach. The thermal design of the FAME instrument satisfies all critical requirements, as shown in Table 4-54, using standard components for a low risk approach. The FAME instrument thermal subsystem provides a stable optical system that is unaffected by environmental and operational variations, which is critical for achieving the science objectives. This capability is achieved by combining stable, low CTE materials with passive and active thermal control to maintain temperature variations at acceptable levels.

Changes to the thermal subsystem because the original proposal are identified in Table 4-52. These changes have simplified the design, and reduced cost and risk. Increasing the focal length to 15 m and performing more detailed thermal-optomechanical analysis has resulted in reducing temperature stability and temperature control requirements.

The design and fabrication of the thermal subsystem is done entirely at LMMS with no subcontracts required. The thermal subsystem is comprised entirely of material with extensive heritage on other space flight programs such as Soft X-ray Telescope (SXT), Michelson Doppler Imager (MDI), and High Resolution Dynamics Limb Sounder (HIRDLS). Therefore, no development is required. The heaters, temperature instrumentation, thermostats, and insulation blankets are all standard space-qualified components with essentially no risk.

The key area of concern is the thermal/mechanical stability of the optical system. The critical elements in the thermal subsystem, along with the mitigation approaches, are shown in Table 4-53.

The thermal subsystem meets all key requirements, as shown in Table 4-54. The thermal requirements are derived from the mechanical stability and alignment requirements for the instrument, shown in Table 4-37.

The optical bench requirement is derived from an end-to-end thermo-mechanical deformation

Table 4-52. Improvements to the Thermal Subsystem Since the Original Proposal

Thermal Subsystem Changes from Original Proposal	Rationale
Heaters on mirror backs eliminated	▪ Additional analysis shows that temperature control of individual mirrors is not necessary because of the low CTE of ULE
Heat pipe between focal plane and radiator eliminated	▪ Analysis shows that an aluminum conduction bar meets requirements, while providing a lower cost, less complex design
Focal plane temperature control relaxed from ±10 mK to ±63 mK	▪ 15 m focal length reduces thermal stability requirement by a factor of 2 compared to previous design ▪ More detailed analysis shows that ±63 mK stability satisfies optical requirements
Focal plane annealing requirement eliminated	▪ Analysis shows that charge transfer efficiencies at end of mission meet requirements without annealing ▪ Reduces complexity and cost

Table 4-53. Our Design Minimizes Deformations in the Optical System to Acceptable Levels

Risk	Mitigation Plan
Spatial temperature gradients in the optical elements resulting in misalignment	▪ Low CTE materials are used for all critical optical elements ▪ Temperature is controlled to keep the materials at near-zero CTE, making spatial temperature gradients unimportant ▪ Integrated thermal/structural/optical analysis verifies that optical requirements are met
Temporal temperature fluctuations of optical elements resulting in image shifts >1/50 of a pixel over 10 minutes or >1/350 of a pixel over 1.5 seconds	▪ Optical elements constructed from low CTE materials ▪ Temperature control to keep the materials at near-zero CTE, minimizing temperature effects ▪ Orbit selection minimizes environmental heat load variations ▪ S/C design provides constant thermal environment thereby eliminating fluctuating heat loads ▪ Integrated thermal/structural/optical analysis verifies that optical requirements are met
Complicated control system to keep temperature variations in the mK range	▪ None needed. Our design does not require mK temperature control on any of the optical elements

study, described in Section 4.4.6.4. Thermal requirements for the mirrors are derived from the allowable deformation, shown in Table 4-37, for the primary mirror because optical performance is most sensitive to deformations in this mirror. The focal plane array requirement is derived from the allowable deformation to ensure less than 1/350 of a pixel image shift.

Table 4-54 shows that the thermal requirements on the optical bench are the most difficult to achieve, while requirements on the mirrors and CCDs are very straightforward. The very low CTE of ULE (10 ppb/°C) results in relatively easy temperature stability requirements on the mirror elements. The CCD focal plane also has relatively loose temperature requirements. The optical bench requires the tightest temperature control.

Table 4-54. All Key Thermal Requirements are Satisfied

Item	Requirement	Performance
Optical Bench		
Temperature (˚C)	5 to 35	23 to 27
Temporal Temperature Stability over 10 min (˚C)	<±0.073	0.001
Temporal Temperature Stability over 1 sec (˚C)	<±0.010	9×10^{-7}
Mirrors		
Temperature (˚C)	5 to 35	21 to 24
Temporal Temperature Stability over 10 min (˚C)	<±2	0.0093 (compound mirror)
Temporal Temperature Stability over 1 sec (˚C)	<±0.3	1.55×10^{-5} (compound mirror)
Spatial Temperature Gradient (˚C)	<±25	0.63 (primary mirror)
Focal Plane Array Assembly		
Temperature (˚C)	≤ -70	-81
Temporal Temperature Stability over 10 min (˚C)	<±0.063	0.002
Temporal Temperature Stability over 1 sec (˚C)	<±0.063	3×10^{-5}
Temporal Temperature Stability (long term)	<±0.063	0.05
Spatial Temperature Gradient (˚C)	<±5.3	0.52 (max)

4.4.6.2 Thermal Design Philosophy. Thermal control is achieved through orbit selection, S/C thermal design, and instrument thermal design. The orbit and S/C orientation greatly reduces environmental heat load fluctuations. The geosynchronous orbit reduces earthshine and albedo heat loads by a factor of 30, compared to a low Earth orbit. The S/C solar shade and its orientation relative to the Sun eliminate direct solar radiation on the instrument. Furthermore, the shield temperature distribution is invariant under S/C rotation around the spin axis. During the rotation cycle, the small heating of the instrument by reradiation from the back of the shield does not change. These design features result in a constant thermal environment, which minimizes instrument temperature fluctuations.

The optics and structural temperatures must be maintained between 5°C and 35°C. This is the temperature region in which the materials have low and matched CTEs. The instrument is thermally isolated from the S/C by titanium flexures and an MLI blanket on the underside of the optical bench. The instrument structure is also covered with an MLI blanket. This blanket reduces both variable heating by Earth and radiation to space, which would otherwise need to be replaced by heater power. The instrument optics view space over approximately 0.3 m^2 through the star view ports and their associated baffles. The view port baffles are thermally isolated from the rest of the instrument, allowing them to operate at a lower temperature than the optical bench. Heat loss from the aperture is minimized. In turn, this minimizes heater power needed to keep the bench at a stable temperature, thus reducing the overall power required.

Electric resistive heaters keep the structure temperature near 20°C, which corresponds to the broad minima in the CTE of the ULE optics and graphite cyanate structure. This would require 155 W of heater power into the optical bench during steady-state operation to balance the radiative losses to space. Heater power is reduced to 80 W when the 114 W of heat generated by the instrument electronics and star trackers is dissipated into the optical bench. A separate bank of thermostatically controlled heaters is also installed on the optical bench to provide power during transfer to geosynchronous orbit and survival periods.

The CCD camera head is thermally isolated from the rest of the structure and radiatively cooled to less than -70°C. An aluminum conduction bar couples the CCD with a 0.14 m^2 radiator, where the 6 W of CCD power is rejected to space.

Certain events are expected to produce thermal disturbances at different times in FAME's rotation and orbit cycles. For example, solar input goes to zero during eclipses. Eclipses last a maximum of 70 min and occur once per orbit (day) during two seasons a year; each season lasts approximately 3.3 weeks. The heating of the instrument by the Earth also varies due to FAME's 40 minute rotation period, and the greatest disturbance is caused when the Earth passes directly through both star view ports on a single rotation. This occurs in roughly 15% of FAME rotations and is dependent on the slowly changing angle between the S/C orbital plane and satellite axis of rotation.

4.4.6.3 Thermal Analysis Results. A thermal math model of the FAME instrument was developed for the CSR with a Thermal Model Generator (TMG). TMG is an integrated module in the IDEAS S/W that was used to design the FAME instrument. Because the finite element thermal model of the instrument is developed directly from the solid model, the thermal modeling is identical to the instrument design and design changes are easily incorporated into the thermal model. This thermal model was used to study the thermal disturbances and their effect on the optical element temperatures. These temperatures are input to a structural model to predict deflections. These deflections are used to verify that optical performance parameters are satisfied. The component power dissipations that were input to the model are shown in the FAME instrument power table in Foldout 4. The nominal operational power was used with the addition of 10 W for each star tracker because they are attached to the instrument bench.

This model includes both solar and Earth thermal disturbances experienced by FAME. The thermal disturbances induced by varying solar and Earth heat loads on the FAME radiation shields cause only extremely small changes in the temperatures of the instrument—essentially a steady state condition. Figures 4-35, 4-36, and 4-37 show the spatial temperature gradients of the compound mirror, the primary mirror, and CCD, respectively, for the baseline configuration of FAME. These temperature gradients do not affect optical performance because the ULE CTE is essentially zero.

In the most extreme thermal configuration, the Earth passes directly through both fields and deposits approximately 18 W/m^2 into the star view ports. This increased aperture heat load has almost no effect on the optics temperatures. The temperature fluctuation of the compound mirror over one 40 minute rotation is shown in Figure 4-38. This shows a maximum temperature increase of 3.5 mK and requires 30 minutes to return to steady state conditions.

A variable thermal environment for the CCD radiator could result in temperature fluctuations of

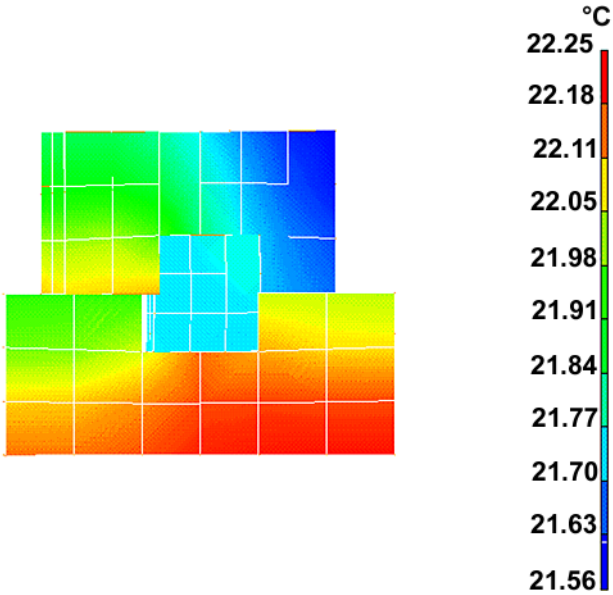

Figure 4-35. Compound Mirror Temperature During Steady State Conditions

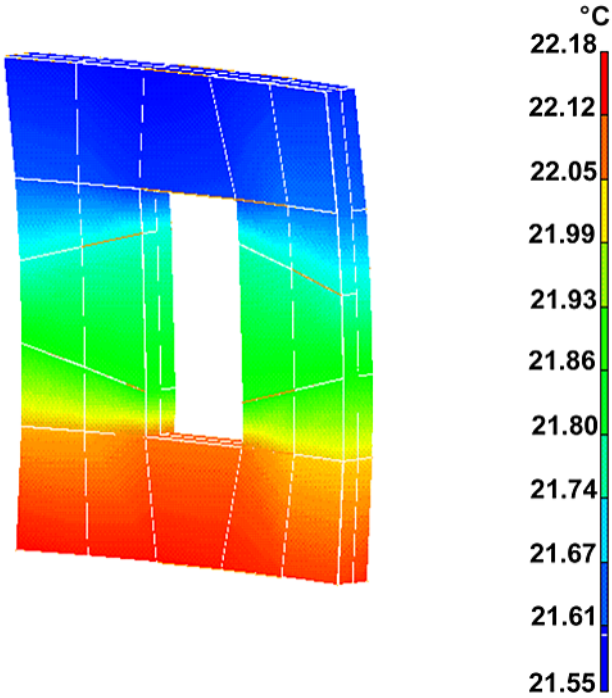

Figure 4-36. Primary Mirror Temperature During Steady State Operation

the CCD. To circumvent this, a bias heater for the CCD is sized to maintain a constant CCD temperature for the coldest condition, which occurs when the radiator views space only. The peak power requirement for this condition is 2 W. Figure 4-39 shows the variation in FPA temperature over a 40

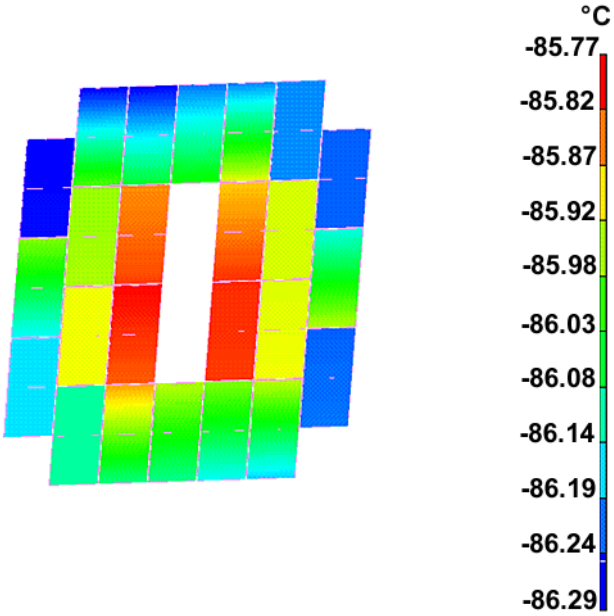

Figure 4-37. Focal Plane Assembly During Steady State Operation (with the Control Heater Off)

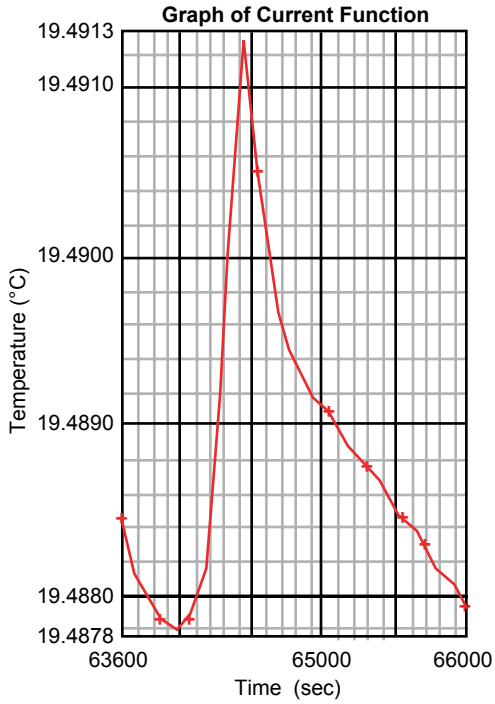

Figure 4-38. Earthshine/Albedo Effects On Compound Mirror Over One Rotation

minute rotation when the FPA radiator is viewing the Earth. This results in less than 4 mK fluctuation on the focal plane.

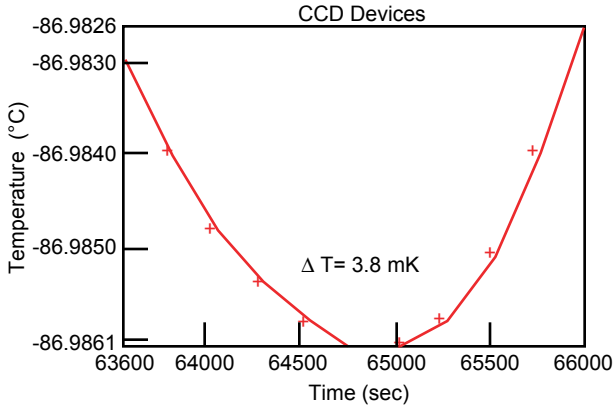

Figure 4-39. Earthshine/Albedo Effects On FPA Over One Rotation

Table 4-55. Thermal Control Heater Modes

Heater	Operational, apertures do not view Earth	Operational, apertures view Earth	Operational, eclipse	Transfer Orbit	Survival
CCD control heater power (W)	2	2	2	0	0
Temperature control heater power (W)	80	80	80	0	0
Survival heater power (W)	0	0	0	20	60

The power requirements for thermal control heaters during various operational scenarios are shown in Table 4-55.

4.4.6.4 Thermo-Mechanical Deformation Analysis of the Optical System. During the concept study, a thermo-mechanical analysis was performed. Thermal gradients generated from the TMG transient analysis were mapped to the IDEAS structural finite element model to predict the rigid body and flexible deformations of the optical elements and CCD assembly. The deformation results were then transferred into the OPTIMA program to evaluate optical performance under the applied temperature gradient. The established links between the thermal, mechanical, and optical analyses allow rapid trade studies on the structural design. There was an insignificant wavefront error and change in Strehl ratio due to the thermal deformation of the optical system. Image shift was also small. These results were used to calculate the temperature stability requirement for the optical bench. For <1/50 pixel image shift, the required temperature stability of the optical bench is ±73 mK. This compares to a predicted temperature change of 1 mK over a 10 minute period. The allowable steady-state gradient in the bench can be much larger as long as it is stable. The thermo-mechanical stability of the mirrors and FPA window is much greater than the optical bench due to the extremely low CTE of ULE. All results are summarized in the performance column of Table 4-54.

4.4.7 Error Budget. Table 4-56 shows the astrometric accuracies expected during the mission. Column σ_{ind} lists the centroiding accuracy of a single measurement, with anticipated instrumental systematics of 105 μas included. The 105 μas reflects correction for error by modeling based on all available data. In forming the estimates of astrometric parameters for the whole mission, there is an additional reduction of error via averaging, to a limit set by correlations. Effects of the neutral density filters on the photon statistics can be seen in Table 4-56. The column N is the typical number of usable observations made for a star of a given magnitude. This number not only includes the fact that some of the CCDs are covered with ND filters, but that for magnitude 4, 6, and 8, some observations through a particular filter will be saturated. This depends on whether the image passes straight down a TDI column, or if the image is elongated in the cross-scan direction by the S/C precession. The final mission accuracy estimate is listed under σ_M in Table 4-56. This is calculated as the RSS of an allowance for correlated errors (10 μas, see below), and the single observation accuracy divided by the square root of half of the number of observations. The error budget includes those of the instrumental/systematic type; those that do not decrease with the number of observations but may, with enough data, be modeled to a manageable level. Figure 4-40 shows the amplitude of these effects. These will be modelable and are expected to contribute a total of less than 10 μas to the final positional accuracies (Table 4-57). A key focus of the Phase B study will be to improve the understanding of the instrument to enable a better estimate of this lower limit to the error.

❒ In Phase B, the use of "Start-Stop" technology (SST) will be investigated. Using SST, all CCDs are available in all magnitude ranges. This increas-

Table 4-56. FAME Accuracies

M_v	σ_{ind} (μas)	N	σ_M (μas)
4	314	143	38
5	485	204	49
6	328	153	39
7	485	204	49
8	314	666	20
9	482	952	24
10	758	952	36
11	1206	952	56
12	1943	952	90
13	3189	952	146
14	5404	952	248
15	9664	952	443
16	18646	952	855

Table 4-57. Averaging Characteristics of Major Systematic Error sources

Distortion as function of wavelength	Proportional to radius in FOV—after modeling, observations of a given star will have mean error <<10 μas.
Charge transfer effects	Primarily due to traps. The larger traps are modeled individually. Those that are left are smaller, and random, so will average to <10 μas.
Incorrect stellar spectrum model	Average over pixel phase, for a particular star of any spectrum, is <<10 μas.
Optical distortion	Average over FOV is <<10 μas by modeling.

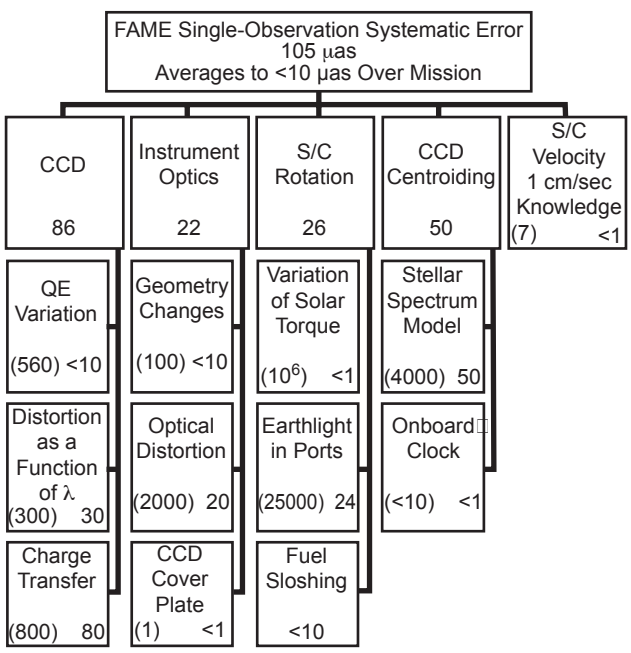

Figure 4-40. Fame Instrumental Effects

Error of a single observation, exclusive of statistical error, in μas both before (in parentheses) and after (not in parentheses) correcting with models based on all mission data.

es the number of astrometric observations per star, thereby increasing the mission accuracy. If this is successful, the errors will be reduced to less than 35 μas for all stars brighter than V=10.

4.5 Payload Integration.

4.5.1 Instrument Integration and Test. The FAME instrument is assembled and integrated as shown in the FAME master schedule. Figure 4-41 details the component assembly flow and phasing of the critical assembly tasks. LMMS has extensive experience in integrating and testing electro-optical systems on programs including TRACE, CLAES and HIRDLS. The assembly sequence begins with the receipt of the composite structure assembly. After delivery, the structure is cleaned and baked-out prior to optics installation. All assembly and precision cleaning operations are performed in the LMMS Class 100 clean room. The optical elements are then installed and aligned. Section 4.4.2.2 describes the fabrication, assembly, and alignment of the optical elements. The engineering unit focal plane assembly is then installed. The engineering unit focal plane assembly consists of eight CCDs split into two groups of four located on opposite sides of the assembly. This configuration allows testing of TDI rate determination and acquisition capabilities. Following focal plane alignment and electronic box installation, an integrated systems functional test is performed to verify the data I/Fs between the focal plane assembly, electronics and S/W, and an end to end test of the system from input photons to output data stream. The engineering unit focal plane assembly and electronic boxes are then removed.

Before integration into the instrument, this radiator/thermal link assembly will be tested with the engineering model focal plane assembly. The test article will consist of a focal plane assembly engineering model, the thermal link, the radiator, the support structure, and insulation. The engineering model focal plane assembly has a heater to simulate the CCD heat load, a thermal control heater, and temperature sensors. The assembly is subjected to flight-like environments in a vacuum chamber with a nitrogen cold wall to verify that temperature and temperature stability requirements are met. Once this test is complete, the radiator/thermal link assembly is ready for integration into the instrument. The radiator/thermal link assembly

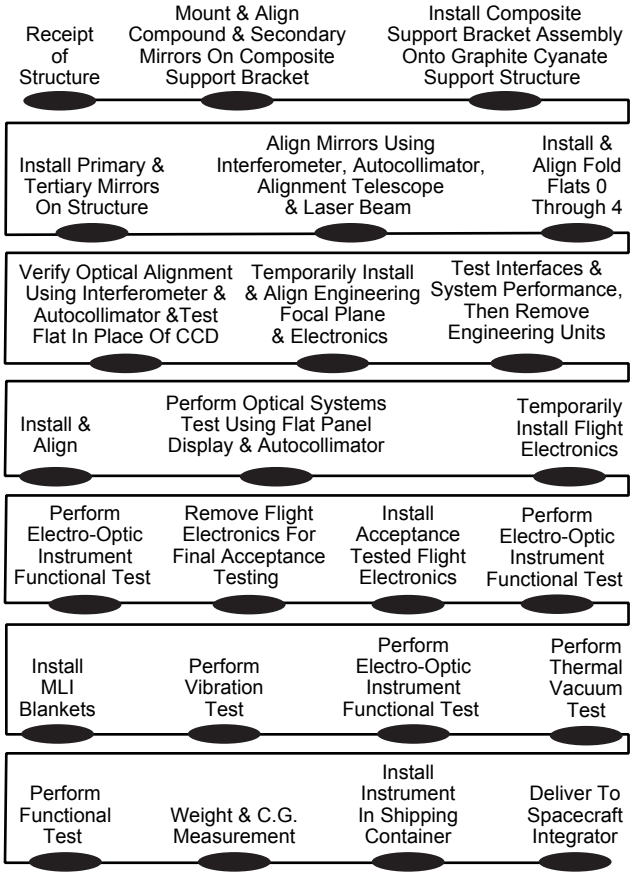

Figure 4-41. Instrument I&T Flows

and the flight focal plane assembly, after completing full environmental acceptance testing, which is described in Section 4.4.3.3, is installed and aligned to the optical elements. The flight electronic boxes, after completing a successful full functional test, are temporarily installed on the instrument assembly. At that time an instrument full electro-optic functional test is performed verifying proper operation of the focal plane array, alignment of the optical system and integrating sphere, and performance of FSW and electronics. The electro-optic functional test sequence is defined in Table 4-58.

After completion of the instrument functional test, the electronic boxes are removed and conformal coating of all electronic boards performed. After conformal coating, the electronic boxes are reassembled and then undergo component environmental testing, which includes EMC, vibration, pyroshock and thermal vacuum testing. After completion of the electronic box acceptance testing, the electronic boxes are reinstalled on the instrument. With the installation and interconnect of the electronic boxes, the instrument is now ready for systems test. At the beginning of systems test, a full electro-optics functional test is performed with FSW installed. Next, the instrument undergoes EMC, vibration testing, functional testing, thermal vacuum testing, and final functional testing. EMC testing is performed in the Class 100 clean room with test consoles located outside and cabling run inside to the instrument. Vibration and thermal vacuum testing are performed in the LMMS vibration test facilities. The systems test cycle is complete with the measurement of the instrument weight and center of gravity and installation of the instrument in the shipping container.

Table 4-58. E-O Tests

Electro-Optic Functional Test Sequence	Functions to be Verified
Load Flight Software	▪ Verify housekeeping data
Perform Scan Test	▪ Verify TDI operation ▪ Verify acquisition mode ▪ Verify binning controls ▪ Verify TDI rate acquisition
Perform Centroiding Accuracy Test	▪ Verify centroiding capability to within 1/350 of a pixel

4.5.2 Instrument Interface.

4.5.2.1 Mechanical Interface. This section examines the mechanical I/Fs affected by the optical system design changes and the remaining instrument to S/C I/Fs.

❒ During the update of the composite structure design, the S/C shroud dynamic envelope was used as a maximum volume gauge to assure successful integration of the instrument on the S/C. The S/C shroud dynamic envelope is defined as a 254 cm cylinder that is 7.62 cm long which then tapers in at 15 deg for the next 71.12 cm and further tapers in an additional 5 deg for the next 63.40 cm. The design of the instrument within this envelope was completed successfully. Another critical I/F area updated during the CSR was the instrument mass properties. The mass property changes are reviewed in more detail in Foldout 4 and section 4.4.4.1. All critical S/C to instrument I/Fs were reviewed during the CSR by LMMS and NRL personnel to assure successful integration of the instrument on the S/C. During the CSR, the overall system alignment requirements were reviewed and the following changes were identified:

❒ Two S/C star tracker mounting locations were moved to the instrument optical bench to facilitate

boresight alignment of the star trackers to the instrument focal plane assembly CCDs.

❒ Optical cubes were added to the instrument to allow alignment of the focal plane assembly CCDs, star tracker boresight, and the spin axis of S/C. During instrument assembly, the optical cubes are aligned to the focal plane assembly CCD columns. When the instrument is installed onto the S/C, the optical cubes provide an easy reference for orientating the focal plane assembly CCDs relative to the S/C spin axis. The alignment cubes allow the star tracker boresight to be aligned to the focal plane assembly during installation onto the optical bench. The instrument mounting system onto the S/C is composed of three mounts that can be shimmed and adjusted such that the optical axis of the CCD focal plane assembly, which has been transferred to the optical cube and the S/C spin axis, can be aligned at integration. These design changes have improved overall system performance and simplified alignment integration effort.

4.5.2.2 Electrical Interface. There are four electrical instrument I/Fs: power, passive telemetry, 1553, and serial science data out. Instrument power (see Foldout 4, Figure A) is provided by two 28-volt DC inputs. Only one of these inputs is required to operate the instrument. The primary power input activates the "A" side of the instrument, and the secondary power input activates the "B" side. If both are active, only the "A" side is operational. Passive telemetry provides thermistor readouts to the S/C for monitoring temperatures while the instrument is off. These values are used to control the survival heaters. The 1553 I/F provides the commanding and housekeeping I/F between FAME and the S/C. There are two redundant 1553 busses which are controlled by the S/C using the MIL-STD-1553B protocol. The command I/F is used for time updates, star tracker attitude, active heater temperature setpoints, star catalog updates, flight program patches, and special test modes. The housekeeping I/F provides updated temperatures, voltage monitors, and command status information back to the S/C approximately once per second. The science data are sent on the quad High Speed Serial (HSS) link. This I/F can operate at rates between 0.5 to 20 megabits per second. For FAME, the expected data rates depend on the number of stars in the field of view. Outside of the galactic plane, an average of 817 stars are expected per second, which corresponds to a data rate of 263 kb/s per second. In the galactic plane, the number of stars in the catalog is selectively populated to keep the data rate under 400 kb/s.

4.6 Manufacturing, Integration, and Test. The primary objective during the manufacturing, integration, and test phase is to qualify all components, subsystems, systems, and S/W such that a very reliable and highly qualified S/C is delivered on schedule that meets or exceeds all mission requirements and specifications. To meet the program schedule, a smooth transition is made from the design to the fabrication phase of the mission. To facilitate this transition, NRL's engineering approach retains a single team of subsystem engineers from design through system level acceptance testing, thereby ensuring cost-effective and reliable S/C verification. The maintenance of this team from program start-up enables timely resolution of problems during the fabrication, integration, and test phases because the team is involved in the initial system and requirements definition, design analyses and trades, "black box" manufacturing, and test plan development.

4.6.1 Verification and Test. FAME uses an incremental design verification and test program throughout the development process to provide program visibility against cost, schedule, and technical performance. Emphasis is placed on performance-based testing, early verification of system design and environmental predictions, and demonstrated margins during testing.

4.6.2 Hardware Procurement and Fabrication Processes. All procured hardware along with long-lead items and consumables are procured in a timely manner to minimize any schedule constraints during this phase of the mission. Fabricated hardware is obtained from a select list of vendors. All manufactured and procured hardware will adhere to the quality assurance ground rules stated in Section 4.9.

4.6.3 Software Development Processes. FSW is developed using MIL-STD-498 guidelines. Requirements are validated by formal review. Once the requirements have been gathered, validated, and documented, the design and coding begins. The S/W architecture and designs are presented at program design reviews. All new code

developed for this program undergoes a formal code walkthrough. For each formal build, the S/W for each flight component is unit tested by the developer before integration with the rest of the code. During Phase C, each build undergoes formal testing to ensure that the current requirements are met, all previous requirements are still being met, and to identify as many anomalies as possible. All anomalies are documented in formal problem reports. The Version Description Document (VDD) delivered with each build identifies what S/W requirements are met by the delivered version, what problems were fixed, and what problems are known, but not corrected. At a minimum, the S/W group generates a S/W Development Plan and a VDD (one VDD for each S/W delivery).

4.6.4 Systems Level Integration. System level integration is performed at the NRL's Integration and Test facilities. These facilities contain ample room for integration and an array of cleanroom environments to support the needs of the program. During the integration phase, qualified technicians, QA engineers, and planners, under the guidance of an experienced Integration and Test Engineer, are used. To ensure a smooth transition throughout the integration phase, engineering models are used. These engineering models are used for a range of activities from RCS fabrication to solar array/Sun shield assembly deployment testing. The first step in the S/C assembly is the assembly of the primary structure. An assembly fixture is used to ensure proper alignment. The primary structure consists of the thrust tube, deck angles, longerons, and instrument support panels. Next, the RCS subsystem and instrument I/F deck are integrated. The RCS subsystem consists of the propellant tank, thrusters, valves, and plumbing. In parallel with this, the electrical components are integrated to the electronics deck. Once the electronics deck is complete, it is integrated to the primary structure. Due to the fact that the design is modular, a parallel integration can occur. At this time the S/C bus is ready for the integration of the instrument. Foldout 3, Figure C describes the integration flow.

4.6.5 Tooling, Fixtures, and GSE. Minor modifications will be made to existing handling dollies and shipping containers from the *Clementine* program to support FAME. This reduces non-recurring costs. However, this is not the case for several tooling and test fixtures. The tooling fixtures need to be fabricated for the assembly of the S/C's primary structure and the RCS. They will be designed and manufactured after the design of the S/C has matured. The testing fixtures will be fabricated at a later date and will be available at the appropriate time to meet the program's schedule.

4.6.6 System Level Electrical Integration. The first step in the FAME S/C electrical integration process involves build of a full-size structural engineering model to provide a frame for the flight wire harness build. As the harness is prepared, the engineering model flight boxes are integrated as they become available. All engineering model and flight units are bench tested before integration onto the "table top" structure. As the boxes are added, integrated functional tests are performed incrementally to insure S/W and H/W I/Fs are correct. As the protoflight structure become available, integration activities are transitioned to the protoflight structure/harness.

4.6.7 Software Integration. NRL uses OS/COMET S/W for all integration and mission operations activities. This allows operations use of the same command and telemetry databases, performance test files, telemetry display screens, and graphical I/Fs that are developed during integration and test activities. The key benefit of this methodology is risk reduction, because a major portion of the operational S/W is developed and verified during integration and test. Also, the subsystem engineers' involvement in integration, test, and display screens development greatly reduces the amount of training required to transition to on-orbit mission operations.

4.6.8 System Level Mechanical Testing. System level testing is performed at NRL's Integration and Test facilities. These facilities contain several small and large thermal vacuum chambers, anechoic chamber, acoustic chamber, vibration test facility, static-loads test facility, optical alignment facility, and spin balance test facility. These facilities are discussed in Section 4.8.

To verify the ability to survive launch and on-orbit flight environments, a comprehensive environmental test plan is developed and a series of environmental tests is performed. A standard aerospace testing program, using MIL-STD-1540 as a

guideline, is conducted. Development, qualification, and acceptance tests are performed as needed. New designs are subject to a rigorous qualification test program to ensure that the design offers a margin of safety over design loads. All parts undergo a thorough acceptance test procedure to ensure acceptability for flight. Table 4-59 presents the test-levels and margins that will be used. A series of performance tests are performed to verify the ability to meet operational requirements. These tests are EMI/EMC, mechanism deployment, thermal-vacuum, alignment verification, mass properties, and system functional and performance checkout. Foldout 3, Figure C shows the test flow.

4.6.9 System Level Electrical Testing. Functional electrical tests serve as the acceptance baseline for the S/C. They consist of an ambient electrical test following S/C subsystem integration, establishing the baseline for subsequent testing. Functional tests verify the integrity and functionality of all normal and redundant components, connector and cross-strapping I/Fs, vehicle-to-GSE I/Fs, component-to-component I/Fs, vehicle-to-GSE I/Fs, vehicle-to-L/V I/Fs, and component/subsystem power consumption. After this functional test baseline is established, abbreviated functional tests are preformed before, during, and after environmental tests. Table 4-59 presents the test levels and margins that are used for burn-in, EMI, and thermal cycle tests.

4.6.10 Manufacturing, Integration, and Test Schedule. The detailed schedule of the overall program is defined in Foldout 7, Figure A. The schedule defines the major milestones for the manufacturing, integration, and test phases of the mission.

4.7 MO&DA Systems.

4.7.1 Overview. Foldout 5, Figure A shows the FAME Mission Operations System (MOS) consisting of the S/C, the BP ground station (augmented by DSN for early on-orbit operations), the Mission Operations Center (MOC), and the Science Operations Center (SOC). The S/C is operated by NRL's BP using the existing MOC, with the addition of a dedicated 11.3 m antenna and two dedicated workstations. The MOC operates the S/C bus and the SOC operates the instrument, while all communications with the S/C are via the MOC. Continuous wideband instrument data are downlinked from the S/C on a "24/7" basis, and all decommutated science data flow to the SOC in realtime. During the science operations phase of the mission, S/C servicing and tasking nominally occur during a single daily upload from BP. This upload includes immediate and stored bus servicing routines and scripted instrument tasking. The instrument scripts are developed at the SOC, sent electronically to the MOC, verified, and then stored until the SOC-specified transmission time. During preventive maintenance periods, or in case of a failure, the FAME antenna at BP is backed up by one of the two 15 m S-Band on-site antennas. The switching matrix at BP is configured so that the uplink and downlink path can be reconfigured by the BP operators with a few "mouse clicks." BP routinely exercises all backup systems in order to maintain operator's proficiency in those systems and to locate any system anomalies before the backup systems are needed.

Table 4-59. Tests Follow MIL-STD-1540

Test	Flight Limit Loads	Protoflight	Qualification
Random Vibration	Flight for One Minute	Flight +3 dB for Two Minutes	Flight +6 dB for Two Minutes
Acoustic	Flight for One Minute	Flight +3 dB for Two Minutes	Flight +6 dB for Two Minutes
Pyrotechnic Shock	Fire Ordnance Once	Fire Ordnance One Time	Fire Ordnance Three Times
Thermal Vacuum	Max/Min Flight Temperatures	5˚C	10˚C
Burn-in	NA	200 hrs with Last 50 hrs Failure Free	200 hrs with Last 50 hrs Failure Free
EMI	Range Safety Self Compatibility	Defined in Phase B	Defined in Phase B
Thermal Cycling	Flight Environment	9 Cycles (5˚C)	13 Cycles (10˚C)

4.7.2 Management Approach. The MOC has primary responsibility for S/C bus management, including development of operational timelines, command sequences, and S/C uplink. The MOC receives instrument command sequences (packets) from the SOC and, after verification, queues them for uplink based on times appended to the command sequences by the SOC. The MOC distributes downlinked science data and instrument SOH data products to the SOC. The MOC at BP and the SOC at USNO are connected by a dedicated T1 link. All instrument activities are planned and managed at the SOC. Once per week, the SOC transfers a weekly plan file to the MOC. The plan

file contains the schedule of events for instrument operations, and the command sequences to be uplinked. The MOC receives this file and validates that it was not corrupted during transmission. Each day's sequence of events is stored in the queue to be uplinked via the dedicated BP antenna. Regular communications, such as catalog updates, will be uplinked using scheduled daily updates to simplify operations. However, because the S/C is in view at all times, uplinks can be implemented as necessary.

4.7.3 Wide Area Networking. The mission uses two ground communication network paths. Both networks are based on the use of dedicated T1 data links (1.544 Mb/s) using standard communications protocols and network routers. No data encryption is baselined.

❒ *Early On-Orbit Operational Phase:* The first data path, used during launch and the early orbit period, consists of a dedicated T1 link between BP and the NASA Integrated Services Network (NISN) via GSFC. This path enables data transfer of S/C telemetry and tracking data from NASA's DSN 34-m Beam Waveguide antennas at Madrid, Goldstone, and Canberra to BP. It also enables throughput commanding from BP to DSN sites. This link is exercised during the pre-launch phase for compatibility tests.

❒ *Operational Phase:* The second communications path is a dedicated T1 link between BP and USNO's SOC. The BP's FEP parses S/C and instrument SOH data and wideband science data into separate data streams and forwards the science data and instrument SOH data to the SOC. The S/C SOH data are monitored at the MOC. This network link is active throughout the mission.

❒ *Computer Security:* Both T1 data links use dedicated connections, maintaining secure data transfers. The link to the FAME public web site from the SOC is isolated from both T1 links via an "air gap" i.e., no physical or virtual connection exists between them. A secure firewall is maintained between the SOC and the public Internet and password protection is implemented. All system accesses are logged and monitored to detect intrusion attempts. A periodic computer security testing program assesses possible vulnerabilities.

4.7.4 Staffing Plans. BP is currently staffed and operated 24 hours/day, 7 days/week to meet NRL's ongoing satellite operations. For FAME's requirements, additional personnel are added. Staffing starts during Phase C/D so that detailed knowledge of S/C operation and MOC constraints are collected and documented. BP personnel are assigned responsibility to provide training and support to the S/C bus IPDT and the I&T IPDT. BP participates in the S/C and instrument subsystem testing. Specific MOC components (e.g., CEU, server, client workstations, OS-COMET S/W) are used to support these project phases and to develop C&T databases, display formats, and command sequences. We will bring these items forward into the MOS to support on-orbit EE&C and flight operations. During I&T, the S/C specialist provides direct support to the I&T IPDT lead as a participating member of the team. On-orbit mission simulations are conducted during I&T and CPET. During normal operations, BP performs S/C commanding, telemetry collection, and data archiving. BP also supports SOC mission planning activities. During the EE&C phase, the MOC staff is augmented by the S/C bus and instrument development team. Procedures are validated and autonomy rules are verified. BP is staffed 24/7 during all phases. Foldout 5, Table D lists the BP staffing during the Operational Phase.

4.7.5 GDS Facility Reuse. FAME uses NRL's existing BP ground station. BP provides an in-place infrastructure and is currently supporting NRL's satellite programs. Located at Blossom Point, MD on the north shore of the Potomac River, the 23 acre facility is surrounded by a 609 m buffer zone. This setting assures freedom from interference and enables satellite tracking down to zero degrees elevation angle. BP has provided over 30 years of S/C engineering evaluation and operational support to NRL. BP uses a distributed, open system environment using COTS OS/COMET S/W for C&T processing, equipment configuration, control, and narrowband data archival. Existing infrastructure for C^3 and Level 0 data processing supports more than 150 satellite contacts per day. Architecture changes for FAME are minimal as shown in Figure 4-42. To ensure uninterrupted S/C viewing, a dedicated 11.3 m limited motion antenna system must be installed. The COTS antenna system upgrades include a reflector, pedestal, controller, and dual transmitters. Other sta-

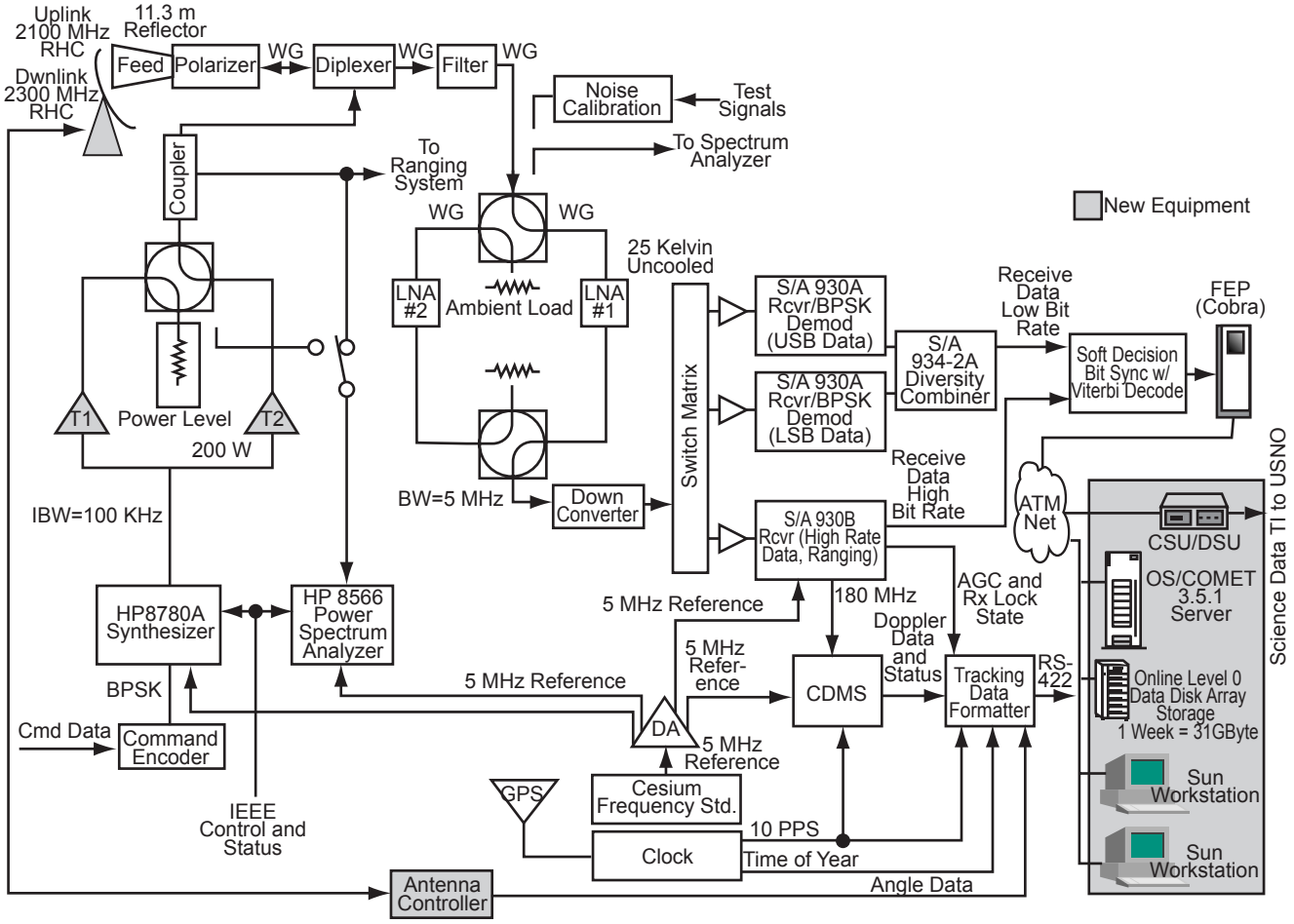

Figure 4-42. BP Architecture for FAME Support

tion upgrades include a dedicated server and workstations. All other components shown in Figure 4-42 are existing BP equipment. The FAME SOC is located on the grounds of the USNO in Washington, DC. The USNO is located relatively close to BP and the two locations can be connected easily and cost-effectively using commercial communications networks and industry standard protocols (e.g., TCP/IP, FTP, and NFS remote mounted file access). BP will receive the single telemetry stream from the S/C, decommutate it, and parse the science data and instrument SOH in realtime to the SOC at USNO. When the science data are received at the SOC, they are immediately archived and then forwarded to the data analysis pipeline. The Flight Dynamics workstation in the MOC uses GEODYN to perform orbit computation in support of Mission Planning. See section 4.1.3.5 for further description of the orbit determination system.

4.7.6 Deep Space Network. As shown in Foldout 2, Figure F, the S/C is not always in view of BP during the launch and early orbit mission phases. In order to maintain constant communications between the S/C and the mission operations team at BP, NASA's DSN sites at Goldstone, Madrid, and Canberra will augment BP contact times for the first 7 days of the mission. Although the DSN 26-m antennas are adequate to close both the uplink and downlink margins with the S/C, they are not generally available to support the FAME requirement of up to 12 hours of S/C contact time per day. DSN's Plans and Commitments Office has recommended that the 34-m antenna be baselined to fulfill this requirement. The DSN sites are used in a "bent pipe" mode for telemetry, tracking, and commanding of the FAME S/C. A serial communications link between BP and GSFC/NISN is added to support the FAME mission. Telemetry and tracking data received at any DSN site are routed

in realtime to BP. Likewise, command data will flow from BP through the serial link and directly up to the S/C via the supporting DSN antenna. This "bent pipe" mode of operations with DSN is the same configuration as was used on the *Clementine* mission. A draft of the Project Service Level Agreement (PSLA) was submitted. When the PSLA is completed, the Detailed Mission Requirements (DMR) document will capture the FAME requirements to the DSN. The DMR will also contain the DSN responses and commitments to those requirements.

4.7.7 Mission Unique Facilities. Most S/C monitoring functions are performed automatically by the OS/COMET S/W at BP. Off-the-shelf S/W capabilities include limit checking, trending analysis, and inference engine rules functions. BP verifies S/W execution, analyzes results, investigates anomalies, and responds to off-nominal situations. Realtime SOH data for the S/C are automatically limit-checked by the OS/COMET telemetry processing S/W. Out-of-limits conditions are flagged on the operator display and logged. BP also performs systems status analysis, including the review and generation of trend plots for key parameters and consumables. All out-of-limits conditions or unexpected changes in trend slopes are investigated and resolved by the MOC. Safing measures are automatically initiated whenever it is determined that a critical event seriously jeopardizes the mission if it were to continue to operate beyond defined and acceptable operating limits. Authorized FAME staff will have the ability to access OS/COMET displays and data via the internet to review mission telemetry at any time, and take quick actions to diagnose the problem and/or safe the satellite (if required) before making the trip to BP for more detailed anomaly resolution.

❒ *Antenna System:* A diplexer is required to achieve Right Hand Circular (RHC) polarization on the uplink and downlink. A filter is also required to achieve the necessary Tx/Rx isolation. Components are included to provide transmitter and receiver redundancy. There is also a ranging coupler and a standard noise and signal calibration subsystem. The ground antenna installation requires an adequate foundation to support the weight and mechanical stresses of the antenna's motion and local winds. Procurement specifications are developed during Phase B. However, BP has an unused foundation that will be thoroughly analyzed to assess its applicability to the FAME mission, with a potential cost savings if it proves sufficient.

❒ *Downlink RF System*: BP's standard downlink path contains a bank of Scientific-Atlanta 930 receivers with BPSK demodulators. For FAME, two different receiver configurations are used, one supporting wideband data rates and one supporting narrowband data rates. For wideband rates, the S/C directly BPSK-modulates the science data onto the downlink carrier signal and the ground receiver is tuned to this carrier frequency. The receiver demodulates the signal and outputs the baseband digital data to the bit synchronizer. At the narrowband rates, S/C telemetry is BPSK-modulated onto the 1.7 MHz subcarrier. The carrier frequency (unmodulated) is still present in the downlink signal. In this mode, two ground receivers are used, one tuned to the upper sideband and one tuned to the lower sideband. After demodulation, the signals are sent through a diversity combiner and the data are output to a bit synchronizer.

❒ *Range Rate and Doppler Equipment:* To meet the science requirement for S/C velocity knowledge, range and range rate data are gathered by the GDS. The S/C transponder is nominally operated in the coherent mode and the downlink carrier frequency shift provides S/C ranging information. The carrier frequency is always available during downlink transmission and its presence is not downlink data rate-dependent. Note that when data are modulated onto the carrier, the range rate information is still available. The phase-locked receiver local oscillator (180 MHz ± the doppler frequency) is routed to the Carrier Doppler Measurement System (CDMS). The CDMS measures the doppler frequency and provides the doppler measurement at the rate of 10 samples/second. The CDMS operation is automated and needs no operator intervention. Doppler data are output by the CDMS at all times and are flagged "good" when the receiver's input signal exceeds a preset level, the CDMS doppler loop is locked, and the CDMS has detected no internal faults. The tracking data are formatted and stored on disk for use in assessing S/C movement.

❒ *Digital Data:* For FAME, BP uses CCSDS 101.0-B-3 recommendations for telemetry channel coding. These consist of a soft decision bit synchronizer with a 3-bit quantization and a rate 1/2, constraint-length 7 maximum-likelihood (Viterbi) decoder. All the raw Level 0 incoming downlink telemetry data are captured and stored in the BP FEP. The data are deinterleaved and Reed-Solomon decoded with I = 5 interleaving. The FEP then frame synchronizes the uncoded transfer frame and stores each frame.

❒ *Uplink Commanding*: The mission-unique CEU receives digital uplink commands from a client workstation via an asynchronous RS-232 port. The CEU outputs STDN-compatible data as BPSK command data at 2 kb/s with NRZ-M encoding. This signal modulates a COTS HP8780 signal synthesizer that outputs an RF signal to drive a High Power Amplifier (HPA) for transmission to the FAME S/C. The BP is being upgraded with dual COTS 200W HPAs (200 W continuous STDN-compatible) for the command uplink.

4.7.8 Communication, Tracking and Ground Support. FAME's 28.7˚ inclination and GEO altitude allow continuous 24/7 downlink data communications and continuous uplink availability, simplifying mission planning and flight operations.

❒ *Antenna Visibility:* Foldout 5 shows the ground antenna azimuth and elevation movement necessary to maintain constant contact with the S/C. The elevation ranges from 12˚ to 75˚ and azimuth from 6˚ to 48˚ during each 24 hour period. This allows use of a low cost, limited motion ground station antenna while encompassing all S/C view angles. A trade study determined the range of S/C asynchronous orbit locations with a Washington-area ground facility. Using 5˚ minimum antenna elevation as the criterion resulted in a range of 39.5˚ to 114.5˚ West longitude. A candidate location of 88˚ West longitude is baselined.

❒ *Downlink Telemetry Requirement:* The GDS receives a continuous CCSDS packetized data stream from the S/C at a 400 kb/s rate. These packets consist of commutated wideband science data and narrowband SOH engineering data for the instrument and S/C bus. The S-Band downlink uses BPSK modulation, and the GDS must provide a $<10^{-6}$ BER with a 99.5% data availability.

❒ *Command Uplink Requirement:* The GDS provides an uplink data rate sufficient to update 1˚ x 1˚ tiles comprising the star catalog. Assuming a nominal 2 kb/s uplink data rate, a single tile can be updated in <1 minute. The S-Band command uplink is PCM/PSK/PM modulated with a 16 kHz subcarrier to provide compatibility with NASA DSN stations for launch and GTO injection. Command data processing supports uplink to the S/C per CCSDS COP-1 protocols. S/C command reception and execution is monitored and verified through downlinked COP-1 telemetry. The GDS must support the S/C's three command modes: real-time, ground preplanned, and onboard scheduling based on uplinked command loads.

❒ *Solid State Recorder Management:* The science data from the instrument are inherently "bursty" due to the variable star density as the S/C scans the celestial sphere. The S/C uses an SSR to buffer this stream and data are read out continuously for downlinking. SSR management is required to control data recording, select data for downlink, and to replay data lost in transmission.

❒ *Data Sizing Requirement:* The MOC's GDS is sized to ingest the nominal 400 kb/s continuous data rate, buffer and store the raw data, and forward science data packets to the SOC in realtime. Raw wideband data are archived for playback purposes. The daily data volume is ~4.3 GBytes. A weekly archive data volume is ~30 Gbytes.

4.7.9 Spectrum Management. Our proposed RF spectrum use is based on NASA's existing S-Band frequency allocations. During Phase B, we determine the specific frequency, together with acceptable alternate frequencies if this frequency is unavailable. We follow the guidelines of NASA Handbook 2570.6A and submit NASA Form 566 for assignment of frequency allocations.

4.7.10 Software Systems. The BP ground processing architecture relies on distributed processing under a centralized control process to maximize ground S/W reusability. The use of COTS products and adherence to industry standards minimizes time, risk, and expense for providing support to new programs, such as FAME. The COTS OS/COMET reusable satellite telemetry/command databases, command control procedures, and GUI displays provide significant life-cycle cost reduction because they are also used during FAME S/C

I&T. This system supports a number of NRL's ongoing satellite programs, and has substantial heritage from over 80+ spaceflight programs. Its field-proven applications, flexible architecture, custom adaptability, and easy-to-use development environment provide practical and robust solutions faster and at far less cost than other systems. Updates to this system for FAME's mission unique requirements are accomplished using a structured S/W engineering process. BP uses a spiral build implementation that deploys multiple builds with increasing functionality.

4.7.11 Low Cost Operations. For both the flight and ground systems, automation is included wherever it can be safely and reliably employed. During the science operations phase, the S/C maintains only one operational mode for data collection activities. Also, the orbit characteristics were chosen to minimize east-west, and eliminate north-south, stationkeeping. An east-west maneuver, once every 6 weeks, is required to maintain the desired GEO orbit. The GDS uses the BP infrastructure to lower the on-orbit support costs. Because BP maintains round-the-clock operations, the addition of another project such as FAME requires only a small expenditure. Using DSN to support *only* the launch and early orbit phases, at a cost of $230k/week, saves a significant amount of money over the life of the mission. Because NRL uses OS/COMET S/W for both the S/C integration and test (I&T) and mission operations environments, the command procedures and telemetry display screens developed during I&T are directly transferred for use during mission operations. Additionally, the S/C designers will not need to be trained on the operations consoles, because they will already be accustomed to using the same files and screens they used during I&T.

4.7.12 Existing Facilities and Processes. FAME is significantly reducing project cost by using existing GDS capabilities of BP. BP is currently a state-of-the-industry ground station, incorporating open system computing, a POSIX compliant operating system, COTS operational S/W, and ATM and TCP/IP communications. Additionally, BP employs highly trained and experienced S/C engineers, maintenance engineers, and computer operators to minimize risk, while redundant hardware systems provide high reliability. The minimal changes needed to incorporate FAME into the BP architecture, as highlighted in Figure 4-42, illustrates the flexibility of the BP approach.

4.8 Facilities. Existing facilities and laboratory equipment at USNO, NRL, and LMMS are adequate to execute the project, with only one facility modification.

4.8.1 Modifications and Upgrades. The only required upgrade to facilities is the acquisition of a 11.3m limited motion antenna for the BP GDS (see Section 4.7.5). This upgrade consists of a reflector, pedestal, controller, and dual transmitters. A 9 to 12 month leadtime is anticipated. In-place Environmental Impact Statements (EIS) allow the upgrade without resubmittal. The antenna upgrade is operational in 2002.

4.8.2 Spaceflight Processing Facilities. NRL maintains extensive facilities for the design, fabrication, integration, and test of high performance, high-reliability spaceflight systems. No new facilities or major upgrades are planned or needed. A brief description of NRL facilities follows:

❒ *Modal Survey Test Facility:* Provides the capability to define the S/C dynamic structural characteristics like natural frequencies, damping ratios, and modal deformation patterns. The data support refining and validating the stiffness and mass matrices of a computer models.

❒ *Payload Processing Facility:* Provides a central location for equipment used to assemble and test spaceflight systems, subsystems, and components. It consists of a comprehensive laboratory complex housing a high bay (12 m high ceiling) assembly area, a secure assembly area, support facilities, storage area, lifting equipment, fabrication machinery, and ground transportation equipment.

❒ *RF Anechoic Chamber and Compact Range Facilities:* Used for EMC/EMI testing, and for the design, manufacture, and test spaceflight antennas

❒ *Spacecraft Acoustic Reverberation Chamber Test Facility:* Simulates the vibration and high intensity acoustic noise environment experienced by S/C structures and components during launch. The acoustic reverberation chamber consists of a 283 m^3 reverberant chamber of highly reinforced concrete designed to withstand an internal sound pressure level of 170 dB.

❒ *Mechanical Inspection and Optical Alignment Facility:* Provides the capability to inspect parts

and verify dimensions and alignment of critical spaceflight hardware. Levels of precision are typically to the ten thousandths of a centimeter linear and one arcsecond angular.

❒ *Spacecraft Spin Test Facility:* Used to test and correct balance using either dynamic or static/coupled measurement techniques to force the spin axis to the desired principle axis of the satellite and to verify the moments of inertia on large capacity moment of inertia tables.

❒ *Spacecraft Static Test Loads Facility:* Provides static loads tests to demonstrate that structural design requirements have been achieved. It can test both small (2.25 kg) and large (17,236 kg) articles.

❒ *Spacecraft Vibration Test Facility:* Used to qualify and accept components by simulating the loading environments imposed on hardware and demonstrating compliance to design specifications. Quasi-static, vibrational, and shock loads can be generated using electrodynamic shakers.

❒ *Thermal Vacuum Chamber Facility:* Provides a comprehensive environmental test complex designed to simulate the high vacuum and varying thermal conditions of space. It consists of a large test chamber (5.5 m diameter and 9.75 m long), two medium test chambers (2.5 m diameter and 3 m high), three small test chambers (0.5 m diameter and 0.5 m high), and handling fixtures and cranes.

4.8.3 LMMS Facilities.

❒ *Instrument Optical GSE:* The instrument optical GSE required to build the instrument is readily available at LMMS including a 1-meter collimator. This item will be modified during phase B with a scheduled lead-time of 1 month. LMMS will incorporate a beamsplitter and a flat panel display as a light source thus converting it into an auto-collimator. The modification is expected to have minimal design and assembly impact.

❒ *CCD Test Facility:* The CCD test facility is used to characterize the CCDs after they arrive from the vendor. This facility determines the clock phase overlap, amplitude, and timing of the flight circuitry and uses the same exact circuitry as the flight electronics. This enables us to fully characterize the CCDs and flow that characterization into the flight circuitry before we install the CCD in the focal plane array. LMMS has a dedicated CCD Test Lab that is scheduled for this effort. The lab currently contains all of the optical and testing hardware necessary except for the flight-like electronic circuitry. Procurement of the equipment will start in phase A.

❒ *Instrument Mechanical GSE:* The instrument mechanical ground support equipment list includes the instrument handling dolly, lifting slings, and shipping container. The assembly dolly and lifting slings will be fabricated by July 2001 while the shipping container will be fabricated by January 2002.

❒ *Instrument Class 100 Clean Room Assembly Facility:* The LMMS clean room provides the capabilities to precision clean and certify the instrument components to MIL-STD-1246 level 100 and has adequate space for assembly and test of the instrument. No modification to the facility is required.

❒ *Instrument Thermal Vacuum Chamber Facility:* The LMMS SEPS III thermal vacuum chamber is scheduled for the FAME instrument acceptance testing. It is 14' diameter by 53' long with guide rails for insertion of the optical test bench. The optical bench and optical bench dolly are to be procured in January 2001 for delivery in July 2001. The facility does not require modification for the FAME instrument.

❒ *Instrument Vibration Test Facility:* The LMMS B156 vibration test facility has multi-axis shakers that can handle an instrument the size of FAME and is equipped with a clean room. No facility modifications are required.

4.9 Product Assurance and Safety. FAME baselined a cost-effective, tailored Safety, Reliability, and Quality Assurance (SR&QA) Product Assurance Program (PAP). It establishes requisite provisions for flight H/W, S/W, and GSE concurrent with design activities, and it is commensurate with project costs and risks. It emphasizes verification-by-test and complies with MIDEX Assurance Requirements (MAR).[1] NRL manages the project-level PA program for the S/C, and reviews LMMS efforts. NRL's QA Engineer (QAE) works within the IPDT structure to develop implementation plans. Contained within our Task Descriptions and SOWs are agreements from each IPDT Lead to comply with the PAP. NRL's QAE serves as the

1. Addresses the recommendations of GSFC-410-MIDEX-002 and it follows that document's organization.

single point of contact to the GSFC MIDEX project office for PAP matters. The MIDEX Project Office has authority to review and approve FAME's SR&QA program. Project-level PAP documents include the Safety Program Plan (SPP), the Reliability Plan, the Quality Assurance Plan (QAP), and a Performance Verification Plan. Specific attention is focused on simple, conservative, and test-verifiable designs, using selective redundancy. Also emphasized are procurement controls; fabrication controls and records; inspections and tests; non-conforming material; handling and shipping; and storage controls. The Reliability Plan and the QAP encompass each project element, as well as subcontractors and suppliers. Responsibilities, cost and risk trade criteria, effective implementation of quality provisions, and the consideration of project-unique conditions and requirements are addressed. LMMS maintains a separate Reliability Plan and QAP defining their efforts. Our PAP uses existing and proven plans, processes, and procedures to the maximum extent practical. NRL is responsible for the SR&QA processes, and has review and approval authority over LMMS's SR&QA program.

4.9.1 MAR Guidelines. During Phase B, a formal QA system is defined and implemented. It is based on existing procedures that meet GSFC-410-MIDEX-001 and ANSI/ASQC Q9001-1994 guidelines. Our approach addresses mandatory MAR elements: (i) Quality Assurance; (ii) Reviews; (iii) Safety; (iv) Design Assurance; and (v) Verification. Our QA program ensures that flight H/W, S/W, and GSE are designed, manufactured, and tested to flight standards and that drawing and specification requirements are met. Figure 4-43 shows the existing NRL QA processes applied to each activity. Our QA approach is presented at the SRR and finalized at the PDR.

4.9.1.1 Quality System. Our QA approach consists of a series of integrated actions to ensure both mission success that meets all mission goals. QA is considered throughout all phases of performance. Our program emphasizes quality tasks and their integration with design, fabrication, and test phases. The QA program implements the policies, requirements and activities required during design, fabrication, test and delivery. Requirements are included to detect and correct deficiencies or trends resulting in unsatisfactory flight H/W quality. Workmanship is inspected and configuration is verified beginning at the assembly level. In-process inspections continue through post-environmental test, transportation, and launch site processing activities. QA personnel certify that an appropriate set of activities has occurred to demonstrate compliance and that inspection characteristics conform to their documentation. Each IPDT Lead is charged to ensure: (i) quality requirements are continuously met, including the early and prompt detection of actual and potential non-conformances, evaluations, trends, or conditions that could result in unsatisfactory product quality; and (ii) the implementation of timely and effective remedial and preventative actions.

4.9.1.2 QA Plan and Manual. NRL leads the IPDT process and develops a QAP based on the guidelines of ANSI/ASQC Q9001-1994, augmented by the following: (i) workmanship; (ii) personnel training and certification; (iii) nonconformance control; (iv) procurement control; (v) metrology; (vi) configuration management; (vii) contamination control; and (viii) S/W QA. Other mandatory spaceflight guidelines include: 100% inspection at the assembly level; a Post-Environmental Test Inspection; a MRB with Engineering Design and QA membership; and post-transportation and receiving inspection on all items shipped from suppliers and subcontractors. LMMS QA personnel develop and implement a QAP for instrument flight hardware and support. NRL's QAE works with LMMS to develop internal plans and procedures meeting levied QA requirements. LMMS implements and monitors their own QA programs.

4.9.1.3 Workmanship. For FAME, we baselined workmanship standards the meet or exceed MAR guidelines (see Table 4-60). Extra coupons are obtained for FAME's PWBs. Inplace procedures support coupon delivery to GSFC and assure an approved-for-use report prior to CCA assembly.

4.9.1.4 Problem/Failure Reporting. Starting at acceptance test, a tailored Failure Review And Corrective Action System (FRACAS) is implemented for the first functional test of flight H/W in its major subsystem configuration. This assures that all problems or failures that occur are addressed and corrected. A Failure Review Board (FRB), chaired by the NRL Systems Engineer, is

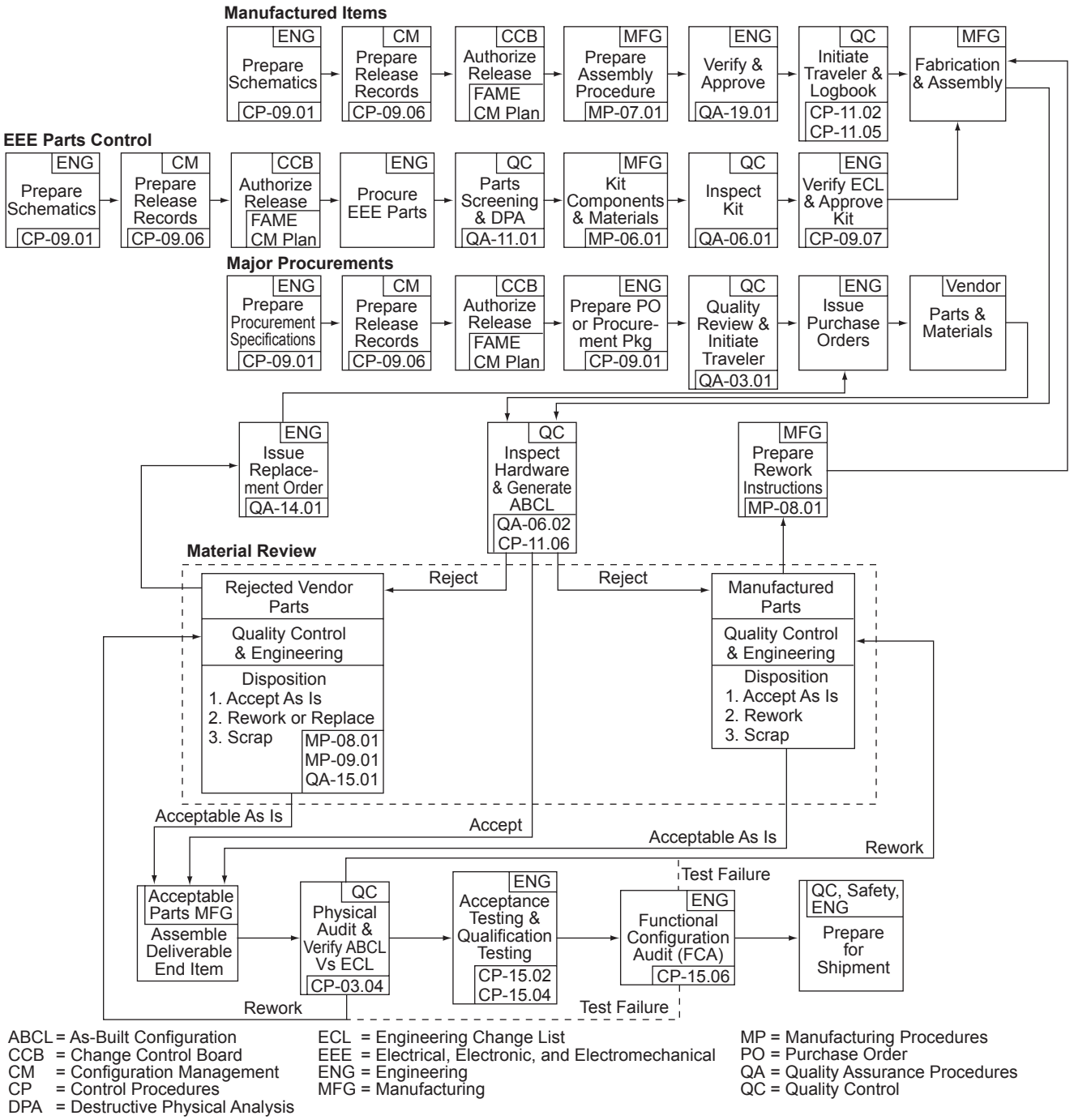

Figure 4-43. Existing QA Program Flows Are Tailored for FAME Phase C/D Activities

maintained. Failure reports and corrective actions are reported to the MIDEX project office monthly. We baselined a web-based Problem Reporting process for flight S/W beginning with the first build release. All PRs are tracked, dispositioned, and statused by the IPDT lead. The PM reports the status of outstanding PR actions during MIDEX project office monthly meetings.

4.9.2 Reviews. We hold a SRR and PDR for the S/C, FSW, and the Instrument during Phase B. Other Phase C/D reviews include the CDR, the TRR, and FRR (see Section 5.6).We conduct incremental peer reviews and present summary results at the formal reviews. Figure 4-44 shows critical PAP review milestones and their relationships to program activities.

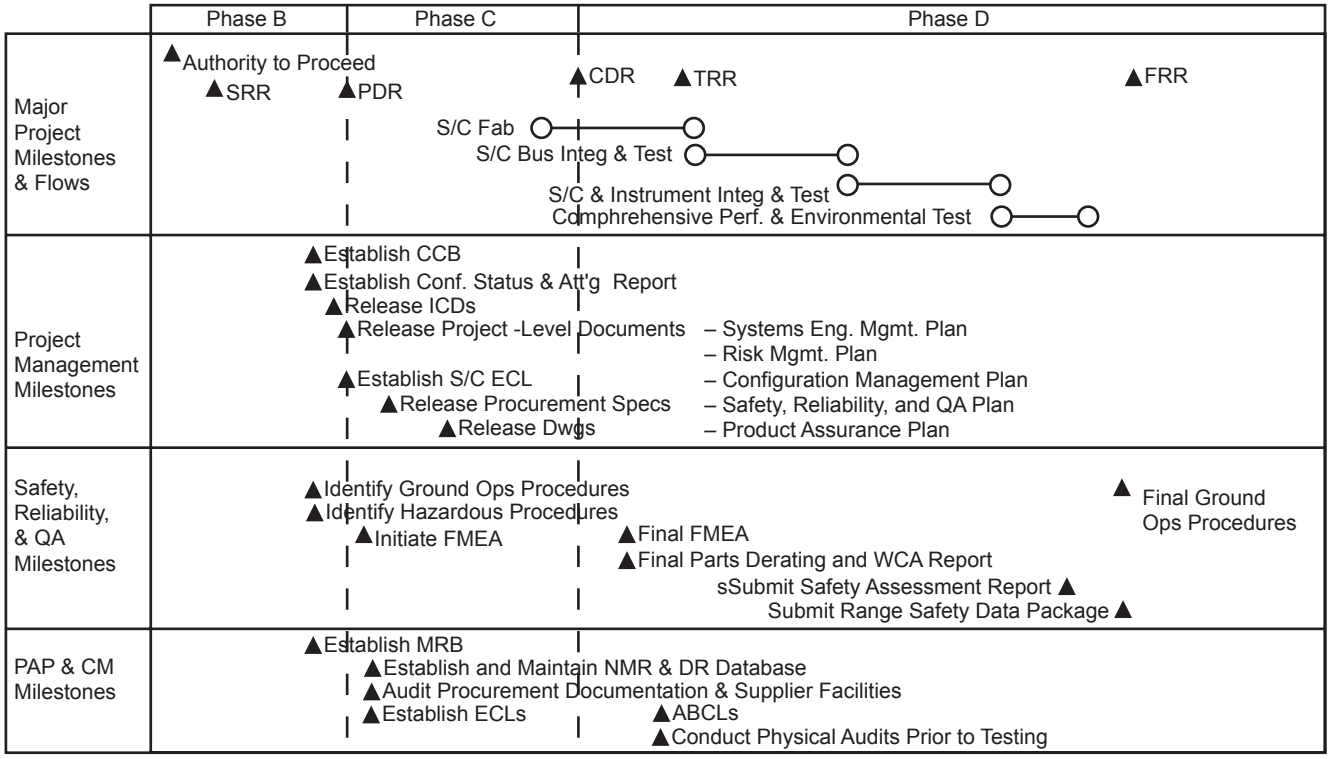

Figure 4-44. Product Assurance Program and Configuration Management Milestones

Table 4-60. Mandatory Workmanship Spec's

Standard	NASA & Commercial	Commercial & NRL
High Reliability Soldering of Electrical Connections	ANSI/J-STD-001 through- 006; NHB 5300.4 (3A-2)	SSD-PS-043, 044, 045, 047, 048
Cable, Harness, & Wiring Interconnects	NHB 5300.4 (3G)	SSD-PS-070
Crimping	NHB 5300.4 (3H)	SSD-PS-071
Conformal Coating and Staking	NHB 5300.4 (3J)	SSD-PS-041, 042
PWB Design	IPC-D-275	IPC-D-275
ESD Control	EIA-625	SSD-PS-052

4.9.3 Safety Assurance. A Safety Program Plan (SPP) is developed during Phase B. It guides the system safety and hazard control decisions and activities during Phases C/D. It meets MAR guidelines, MIL-STD-882, and NHB 1700.1B requirements. During Phase B, NRL appoints a System Safety Manager (SSM) to execute the Safety function throughout Phase C/D. The SSM reports to the PM for project direction and to MIDEX safety officials for policy and technical direction. All safety requirements hinge on minimizing the potential for injury to personnel; equipment loss or facility damage; property damage; and potential impacts to the USNO, NRL, or NASA in terms of cost, schedule, public involvement, or interest.

❒ *System Description and Safety Assessment:* We apply system engineering during Phase B/C/D to identify and reduce hazards associated with fabrication, assembly, test, operation, and support. Engineering documentation is maintained to provide ready traceability to baseline safety requirements. The entire project (S/C, Instrument, GDS, and L/V) receives evaluation for known or potential hazards, and all hazards are either controlled or eliminated by corrective action. We prepare formal hazard reports using the SPP guidelines. Analyses and reports contain the hazard description, affected items, hazard causes and control, methods to verify control exists, and the hazard level (e.g., critical, catastrophic). We submit all safety noncompliances to the MIDEX Project Safety Manager (PSM). To meet range requirements for assured safety, Detailed Operating Procedures (DOP) are developed and supplied to the range. DOPs cover both nominal operations procedures (both hazardous and non-hazardous), and plans and procedures for contingency operations. Many existing *Clementine* procedures are applicable for FAME's pro-

cessing needs. We support working groups that coordinate common I/Fs, L/V integration tasks, range safety, and schedules. We coordinate with the PSM and the Eastern Test Range safety office to develop a launch site safety package. All GSE, flight hardware, and operational activities brought onto the launch site comply with EWRR 127-1. Additionally ground operations, hazardous operations, and S/C pre-launch servicing performed within NASA facilities comply with NASA's internal safety standards. We have in-place processes, procedures, and the experience necessary to meet all range requirements.

4.9.4 Design Assurance. An Engineering Configuration List (ECL) represents the as-designed configuration, and contains the change status of drawings, processes, and procurement specifications. It documents the procurement, manufacturing, and testing of flight H/W and safety-critical GSE. Program specifications and critical documents status is tracked, maintained, and managed using our existing CM process (see Section 5.2).

4.9.4.1 Parts. FAME's parts, materials, and processes are selected with special care. The optical instrument is somewhat sensitive to contamination, driving the need for careful material selection, and a rigid Contamination Control Program (CCP). The GEO altitude presents concerns regarding radiation and charging effects, driving the need for a Radiation Hardness Assurance (RHA) program. Our EEE parts selection program is guided by GSFC-410-MIDEX-001 (Section 5). Our QAE works with IPDT members to develop project-specific EEE parts selection guidelines. We minimize part types by using multi-function devices. We use the GSFC Preferred Parts List (PPL) and MIL-STD-975 as our primary parts selection sources. We take advantage of GSFC's experience in EEE parts engineering and GSFC's 311-INST-001 for a Level II baseline (better than MIDEX guidelines) with selective screening.

4.9.4.2 Materials. A formal, documented, materials and processes (M&P) control program assures that S/C and instrument performance, contamination control, and safety requirements are met. We follow MIDEX guidelines (GSFC-410-MIDEX-001, Section 6.1). Both NRL and LMMS maintain a database of metallic and non-metallic materials usage. All M&P are certified for compliance with safety requirements and for specified outgassing requirements. NRL reviews M&P in flight hardware and provides compliance certification. The M&P Program is documented in a formal plan presented at PDR. We use well-established processes (e.g., soldering, conformal coating, cable harness fabrication, plating) in building our S/C and the Instrument. We use control procedures and work instructions for special processes.

❒ *Contamination Control Program:* Optical scattering, principally caused by particulate and molecular contamination, is a concern to the Instrument design team. To address the concern, a formal CCP for both the Instrument and the S/C is established in Phase B, and we address cleanliness levels throughout fabrication, integration and test, environmental test, and launch operations. Key elements include selection of materials approved for spaceflight applications with a TML <0.1% and a CVCM <0.10%. Our approach achieves cleanliness levels through initial component cleaning, routine S/C cleaning, and a Class 10,000 clean tent for integrated S/C and Instrument I&T activities. Higher level requirements are met using bags and gas purges. All flight hardware undergoes thermal bakeouts to reduce potential self-contamination to address residual condensation on cold surfaces during TVAC, launch, or on-orbit activities. Many of these methods are adapted with little modification from *Clementine*.

4.9.4.3 Reliability. During Phase B, NRL designates a Reliability Engineer to serve as single point of contact for all project reliability issues. He coordinates S/C and Instrument developmental efforts with an integrated reliability engineering program that supports reliability matters like FMEA, parts application analyses, and radiation effects analyses. Our reliability engineering plan follows GSFC-410-MIDEX-001 guidelines (Section 3.0 and Section 5.3). It provides guidance for EEE parts selection, screening, and applications. We perform a FMEA as a "bottom-up" approach to analyze system design and performance using a fully integrated reliability analysis tool (Relex). Our FMEA uses failure rate calculations developed during the reliability prediction analyses.

4.9.4.4 Software QA. Our tailored SQA approach uses guidelines from the Software Engineering Institute, Capability Maturity Model (Level II). We

meet our objective of developing reliable S/W by auditing S/C and Instrument FSW requirements for clarity, technical adequacy, and traceability. Cost-effective, structured, developmental processes (e.g., moderating peer review, code walkthroughs, and test plans) producing minimal developmental documentation are used. SQA ensures that all requirements are verified during testing. A S/W Development Plan (SDP), presented at the PDR, includes SQA in Phases C/D.

4.9.4.5 Test and Verification Program. We have included comprehensive tests in all significant environments, including a functional performance demonstration of specific operating modes, compatibility tests, and end-to-end system tests. A formal System Verification Test Plan defines in detail tests required to demonstrate acceptability of the flight H/W and S/W in the subsystem and system configurations. Prescribed tests are completed using approved procedures, and documented in a final report. These tests provides design qualification, and verify workmanship, material integrity, and readiness for flight. The verification test program includes flight S/W validation to insure that all S/W requirements are met. An environmental test and analysis activity, consisting of environmental design, analysis and testing of the flight H/W and S/W, is implemented. Test requirements address thermal-vacuum (TVAC), dynamics, EMI/EMC and natural space environments. Other key verification requirements include fit checks, RF compatibility tests, and L/V mechanical and electrical verifications, and on-orbit EE&C verification and instrument commissioning. Many of our test documents are adapted with little modification from *Clementine*. Preliminary documents are submitted at PDR, and finalized after the CDR.

4.9.5 New Technology. New technology hardware is flight qualified through tailored tests and analyses. Heritage hardware pedigrees are reviews by the SEIT to determine the applicability of design and test history relative to the FAME mission requirements. The PDR, CDR, and TRR design reviews emphasize reliability and qualification status.

FOLDOUT 2

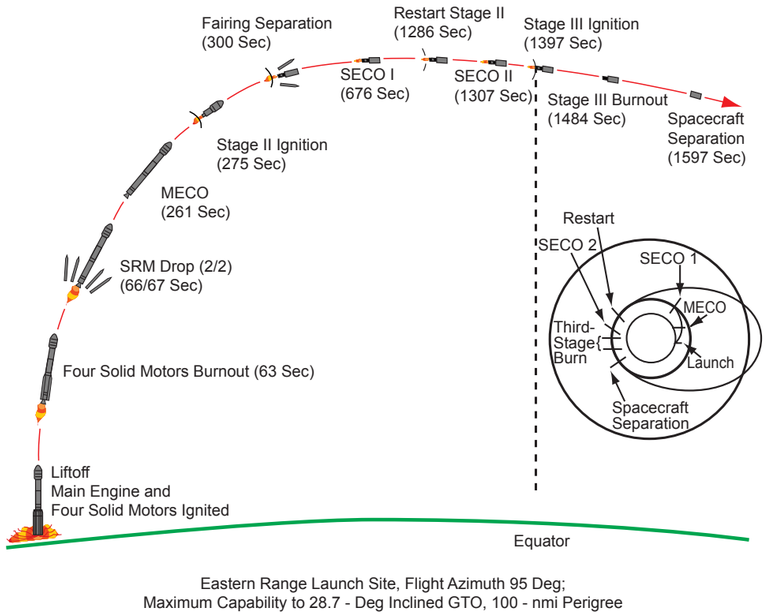

Figure A. Major Mission Events

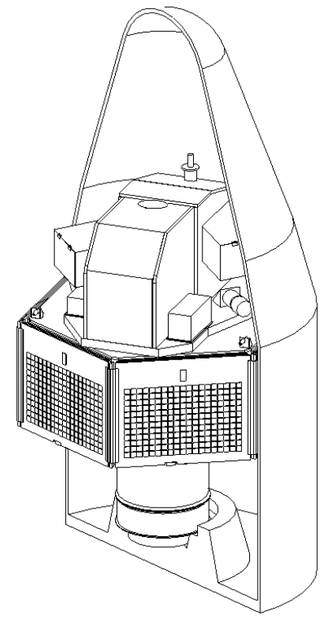

Figure B. Launch Configuration

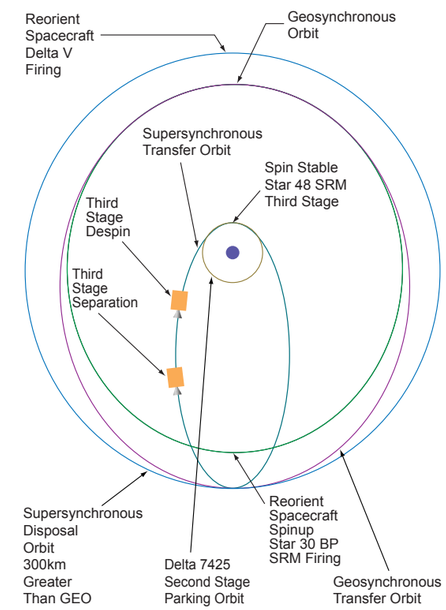

Figure C. Orbit Geometry

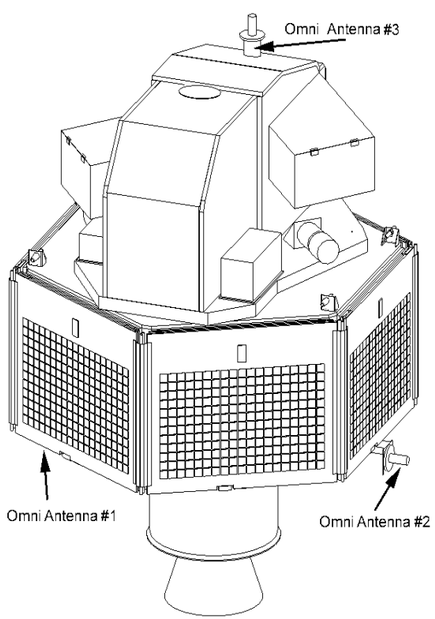

Figure D. FAME GTO Configuration

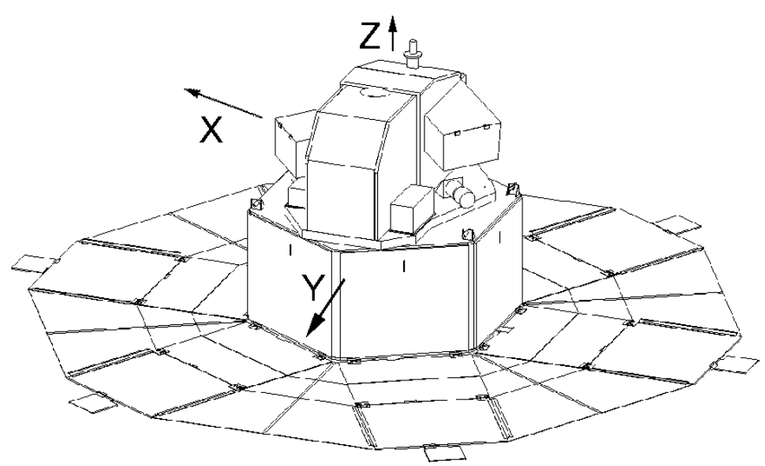

Figure E. Operational Configuration

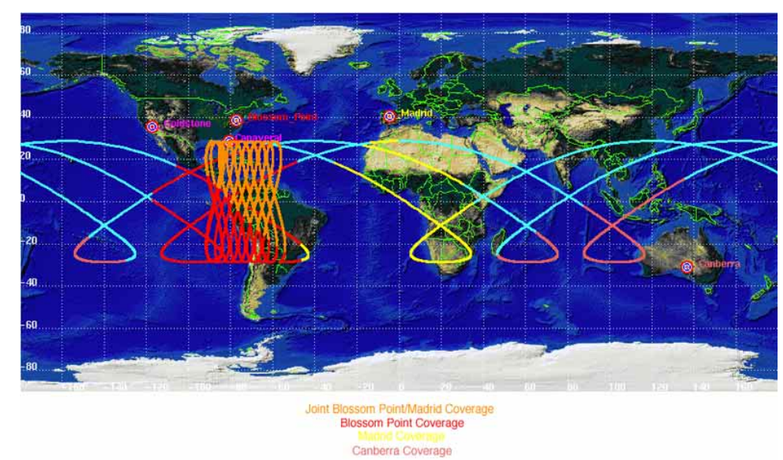

Figure F. Ground Station Coverage (2˚ Minimum Elevation)

FOLDOUT 3

Table A. FAME Equipment Manifest Listing

Subsystem Component	Qty	Total Mass w/ Reserve (kg)	Mass Reserve (%)	Make or Buy	Supplier	% Reuse	Flight Heritage or Flight Qualification Status	Technology Verification Plan
Stowed Spacecraft		1031.07	NA	-				▪ System Level Tests
Deployed Spacecraft		551.62	NA	-				▪ N/A
Instrument Subsystem		229.20	NA	-				▪ Subsystem and System Level Tests
Instrument Assy	1	229.20	20%	Buy	LMMS			▪ Protoflight Subsystem Tests
Structural Subsystem		109.46	NA	-				
Launch Vehicle Adapter	1	5.84	10%	Make	NRL			
Aft AKM Adapter	1	9.88	10%	Make	NRL			
Forward AKM Adapter	1	3.44	10%	Make	NRL			
Bus Thrust Tube	1	25.35	10%	Make	NRL			
Instrument Interface Deck	1	5.24	10%	Make	NRL			
Electronics Deck	1	6.24	10%	Make	NRL			
Enclosure Panels	6	13.47	10%	Make	NRL			▪ System Level Tests at Protoflight Levels
Instrument Support Panels	3	11.23	10%	Make	NRL			
Longerons	6	5.09	10%	Make	NRL			
Deck Angles	12	3.59	10%	Make	NRL			
Thruster Brackets	8	0.40	10%	Make	NRL			
Omni Antenna Support Arm	1	0.65	10%	Make	NRL			
Miscellaneous Hardware	1	5.44	20%	-				
Balance Mass	1	13.61	20%	Make	NRL			
RCS Subsystem		528.58	NA	-				▪ Subsystem and System Level Tests
AKM	1	455.80	5%	Buy	Thiokol, Star 30BP		Hughes 376	▪ Acceptance Test at Component Level
Propellant Tank	1	8.98	10%	Buy	Pressure Systems,80274-1		EXOSAT, ORBVIEW	▪ Acceptance Test at Component Level
Propellant	1	49.90	25%	Buy	Olin Aerospace			▪ N/A
Pressure Transducer	1	0.75	10%	Buy	Taber Industries		Clementine	▪ Acceptance Test at Component Level
Latch Valves	1	2.00	10%	Buy	Moog Space Products		Globalstar	▪ Acceptance Test at Component Level
Thrusters	8	2.86	5%	Buy	Primex Aerospace, MR-11		Clementine	▪ Acceptance Test at Component Level
Safe and Arm Controller	1	2.86	5%	Buy	Thiokol		Hughes 376	▪ Acceptance Test at Component Level
Miscellaneous Hardware	1	5.44	20%	-				▪ N/A
ADCS Subsystem		12.01	NA	-				
IMU	1	0.79	5%	Buy	Litton, LN200		Clementine, ICM	
Sun Sensor	4	1.63	20%	Buy	Adcole, 16764		Multiple Missions	
Sun Sensor Electronics	1	1.36	20%	Buy	Adcole, 16764		Multiple Missions	▪ DT & AT at Component Level; Subsystem PT
Star Tracker	1	3.33	5%	Buy	BATC, CT-633		NEAR	
Passive Nutation Damper	1	3.27	20%	Make	NRL		LIPS III	
Miscellaneous Hardware	1	1.63	20%	-				
Mechanism Subsystem		52.97	NA	-				
Launch Separation System	1	2.25	10%	Make	NRL			
AKM Separation System	1	2.25	10%	Make	NRL		Clementine	
Solar Array Release System	6	2.84	10%	Make	NRL		Clementine	
Omni Antenna Release Sys.	1	0.30	10%	Make	NRL		Clementine	▪ Build of Engineering Prototype (Model) for each new Mechanism ▪ Extensive developmental test program under thermal extremes with accelerated life testing ▪ Subsystem tests include Alignment, and Actuator Tests, Deployment Tests, and Mass Properties Tests, ▪ Systems Level tests include Vibro-Acoustic, Pyroshock tests and TVAC with deployments at critical points in test flow
Sun Shield Release System	6	1.80	10%	Make				
Sun Shield (Deployed)	6	8.16	20%	Make				
Center-of-Mass Trim Mech	3	14.97	10%	Make	NRL			
Sun Shield Trim Mechanism	6	10.48	10%	Make	NRL			
Ordnance Control Unit	1	3.26	5%	Make	NRL		Clementine	
Ordnance Harness	1	1.25	10%	Buy	Glen Air		Clementine	
Solar Array Hinges	6	2.69	10%	Make	NRL		Clementine, LACE	
Miscellaneous Hardware	1	2.72	20%	-				
EPS Subsystem		53.20	NA	-				▪ AT by Supplier; Conversion efficiency verified over thermal range', TVAC at system level
Solar Arrays and Panels	6	25.45	10%	Buy	TechStar		Clementine, NTS	
PCDU	1	5.96	10%	Make	NRL		Clementine	▪ DT & AT at Component Level; Subsystem PT
SPV Battery (NiH_2)	1	20.16	10%	Buy	Eagle Picher		Mars Surveyor, GFO	▪ Acceptance Test at Component Level
Miscellaneous Hardware	1	1.63	20%	-				▪ N/A
RF Telecommunications		16.81	NA					▪ Subsystem and System Level Tests
Transponder	2	8.00	5%	Buy	L3, Inc., CXS-600B		Clementine	▪ Acceptance Test and RF Compatibility Tests
Diplexer	2	1.33	5%	Buy	Metropole		Clementine, ICM	▪ Subsystem and System Level Tests
Hybrid/Coupler	4	0.08	5%	Buy	Omni Spectra		Clementine	▪ Acceptance Test at Component Level
Omni Antenna	3	1.80	10%	Make	NRL		LACE, ICM	▪ Gain/Beam pattern verified on S/C Mockup
High Power Amp	2	3.10	5%	Buy	L3, In.		ICM	▪ Acceptance Test at Component Level
Coax Cables	3	0.87	10%	Make	Gore			▪ Acceptance Test at Component Level
Miscellaneous Hardware	1	1.63	20%					▪ N/A
CT&DH Subsystem		14.68	NA		L-M Fed Sys (R6000); and NRL for specialty modules		SIRTF, EOS-CHEM, Clementine	▪ Subsystem and System Level Tests
SC Controller w/processor, memory, '1553 I/O, & ADCS)	1	8.20	20%	Make				▪ Acceptance Test and RF Compatibility Tests
Cables	1	6.49	10%	Make	NRL		Clementine	▪ Subsystem and System Level Tests
TCS Subsystem		14.15	NA				ICM, TiPS, Clementine, & LACE	
Thermal Blankets	1	6.53	20%	Make	NRL			▪ Thermal Balance Test conducted during TVAC
Miscellaneous Hardware	1	7.62	20%					

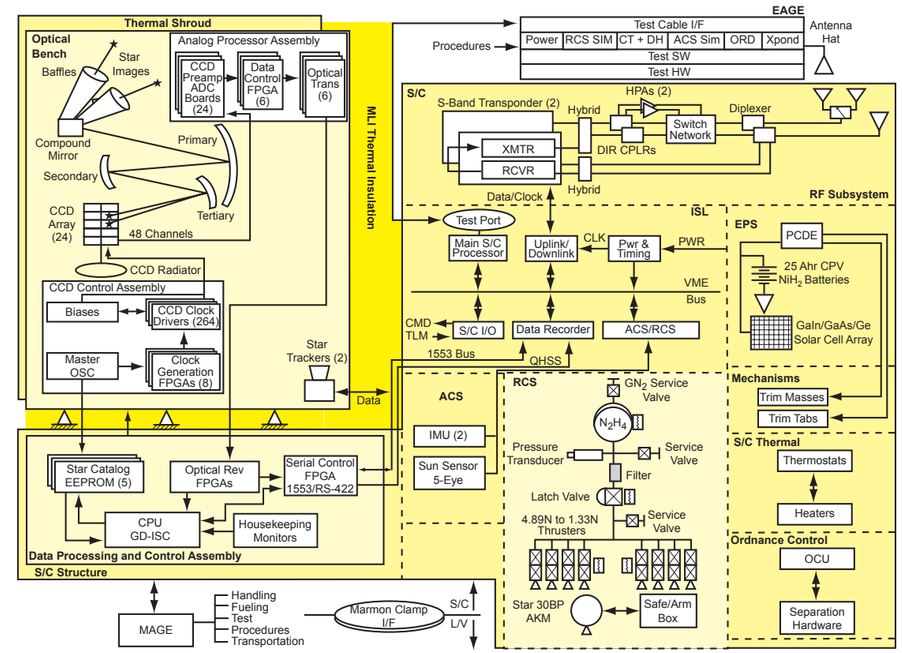

Figure A. FAME Block Diagram

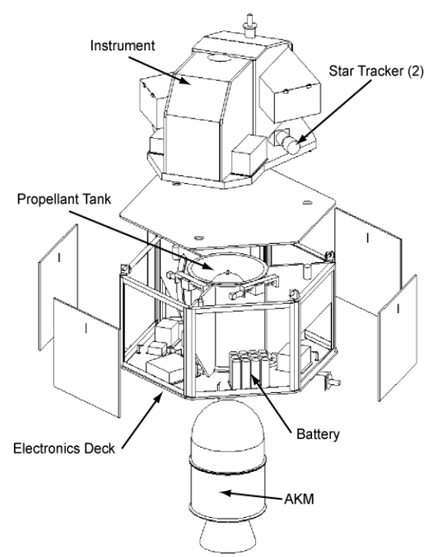

Figure B. FAME Exploded View

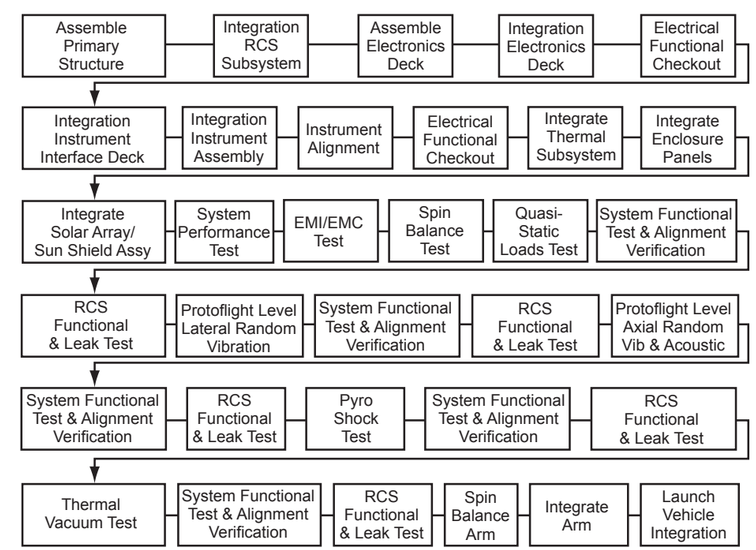

Figure C. System I&T Flow

FOLDOUT 4

FAME Instrument Mass		
Item	1998 Proposal Mass Estimate (kg)	Current Mass Estimate (kg)
Mirrors	54	76
Focal Plane Assembly	14	19
Optical Bench	14	16
Strong Backs	24	23
Other Structural Components	15	6
Baffles, Mounts, and Fasteners	10	11
Analog Processing Electronics	4	4
CCD Control Electronics	10	5
Data Processing & Instrument Control Electronics	10	11
Thermal Hardware and Shields	10	10
Cable Harnesses	0	10
TOTAL MASS ESTIMATE	165	191
Contingency (20%)	33	38
TOTAL PROJECTED MASS	198	229

FAME Instrument

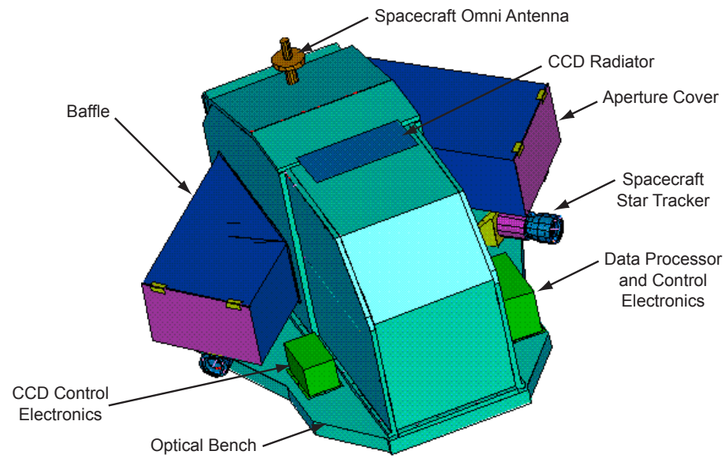

FAME Instrument Power			
Item	Operational* (W)	Transfer Orbit (W)	Survival (W)
Focal Plane Assembly	6	0	0
Analog Processing Electronics (4 Boxes)	15	0	0
CCD Control Electronics	26	0	0
Data Processing & Instrument Control Electronics	50	0	0
Focal Plane Heaters	2	0	0
Instrument Heaters	80	0	0
Survival Heaters	0	20	60
TOTAL POWER ESTIMATE	179	20	60
Contingency (50%)	90	10	30
TOTAL PROJECTED POWER	269	30	90

* Power Is the Same for All Operational Modes:
Both Apertures View Space; One Aperture Views Earth, and Eclipse

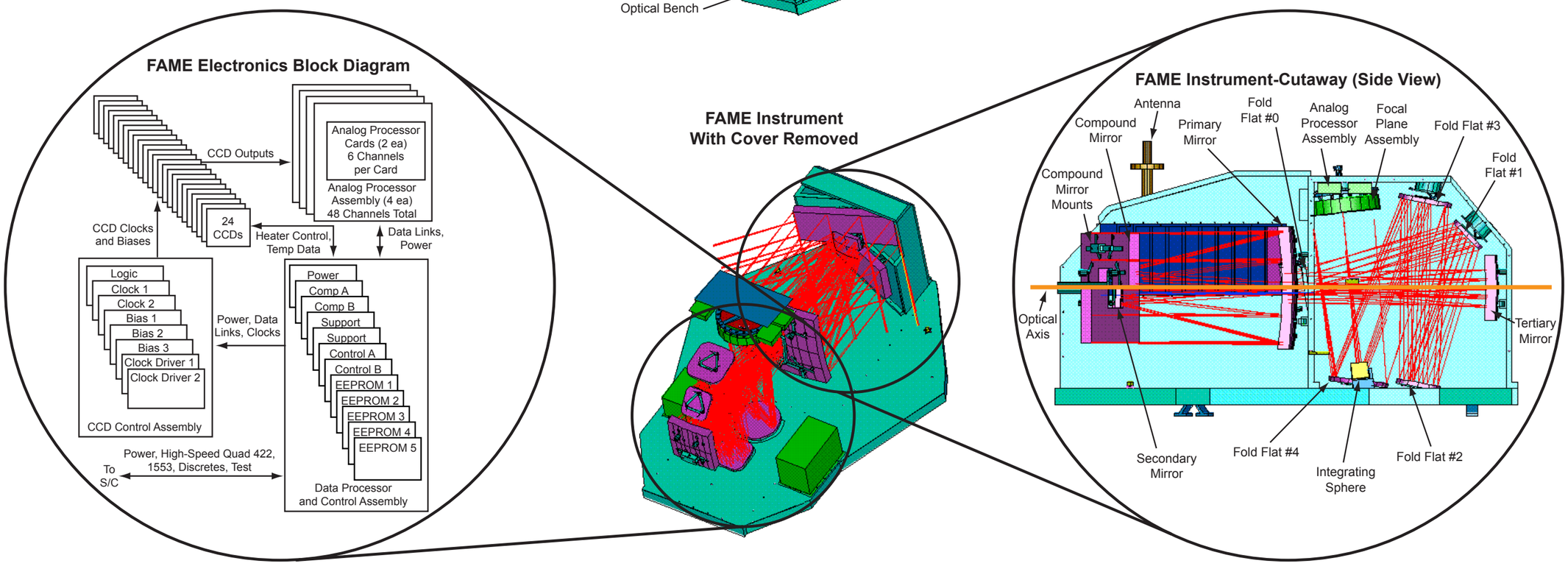

Figure A. FAME Instrument

FOLDOUT 5

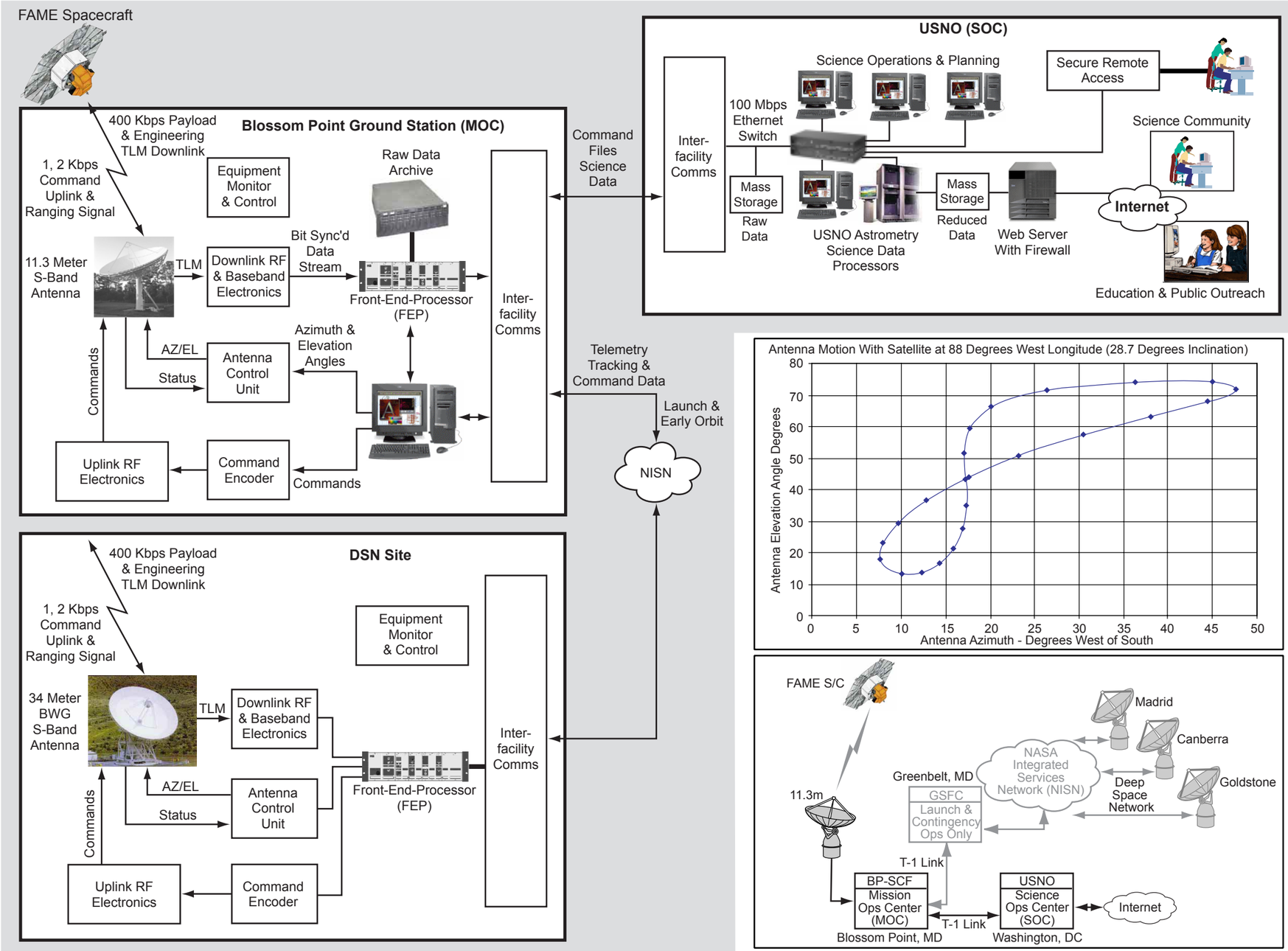

Figure A. Mission Operations Block Diagram

Table A. Uplink Budget (Omni-Mode, GEO)

Transmitter Power (200 W)	53.0 dBm
Line & Diplexer Loss	-0.9 dB
Antenna Gain	44.0 dBi
Free Space Loss (Geosynch at 5 deg elev)	-190.3 dB
Diplexer & Switch Loss	-0.8 dB
Minimum Antenna Gain	-18.0 dBi
Cable Loss	-2.0 dB
-Receiver Sensitivity	-(-118.0 dBm)
Margin	3.0 dB

Table B. Downlink Budget (409 kb/s, GEO)

Power Amplifier Output	40.0 dBm
Diplexer & Switch Loss	-1.5 dB
Line Loss	-2.0 dB
Minimum Antenna Gain	-1.0 dBi
Free Space Loss (5 deg elev)	-191.8 dB
Atmosphere Loss (5 deg elev)	-0.5 dB
Data Rate	-56.1 dB Hz
Receive G/T	22.3 dB/K
Boltzmann's Constant	198.6 dBm/Hz/K
Eb/No	8.0 dB
Implementation Loss	-2.0 dB
Required Eb/No (10^{-6} BER)	-3.0 dB
Margin	3.0 dB

Table C. Downlink Budget (800 bps, GEO)

Transmitter Power	33.0 dBm
Modulation Loss	-2.3 dB
Diplexer, 10 dB Coupler & Switch Loss	-2.0 dB
Line Loss	-2.0 dB
Minimum Antenna Gain (w/Hybrid)	-18.0 dBi
Free Space Loss (5 deg elev)	-191.8 dB
Atmosphere Loss (5 deg elev)	-0.5 dB
Data Rate	-29.0 dB Hz
Receive G/T	22.3 dB/K
Boltzmann's Constant	198.6 dBm/Hz/K
Eb/No	8.3 dB
Implementation Loss	-2.0 dB
Required Eb/No (10^{-6} BER)	-3.0 dB
Margin	3.3 dB

Table D. MOC Staffing

Position	QTY	Comment
Flight Ops Manager	0.5	5 days per week
S/C Specialist	2.0	5 days per week
Console Operators	2.0	1/2 FTE per shift, 4 shifts (24/7 coverage w/relief)
Maintenance Engineer	0.25	Collateral position with other BP Staff
Mission Analyst/Planner	0.5	

5. Management Plan

FAME's programmatic and mission objectives are met using sound technical and managerial approaches. "Lessons Learned" from NRL's *Clementine* program, DoD technology initiatives, NPOI, and spaceflight projects shaped our planning, review, and control approaches. Our proposal includes personnel from these efforts, and we believe that our development approach, coupled with a small engineering team augmented at critical junctures by in-depth "point-skills" at critical junctures provides a low risk approach to meet FAME mission objectives.

❒ Our focused PI and world-class Science Team provide vital and fundamental astronomical data addressing key NASA themes for *Origin*s, for *Structure and Evolution of the Universe*, and for the *Solar System*. Our Team includes laboratory and industry partners who have successfully executed fast-track programs under constrained budgets and schedules. Our "best practice" partners assure high levels of scientific yield per dollar expended. NRL, our laboratory partner for the S/C, provides streamlined and innovative development practices that have been proven on sounding rocket and spaceflight missions for the past 50 years. LMMS ATC, our industry partner for the instrument, is a proven source for highly successful spaceflight missions and instruments during the past 25 years, including SOHO/MDI and TRACE.

❒ Our team is organized on an Integrated Product Development Team (IPDT) basis. Realistic and achievable performance requirements satisfy the demands of the baseline science investigation within cost and schedule constraints. Clear lines of accountability make identifiable individuals, not organizations, responsible for each program element. Our well established, strong systems engineering approach effectively addresses instrument, S/C, and GDS issues. We manage trade studies to obtain the best science available within resource limits. Throughout definition, development, and test activities, our partnering institutions maintain a "badgeless IPDT" environment and a consistent systems engineering focus. Our complete, accurate, and timely reports provide project-wide visibility for development issues via the project website. Frequent and rapid communication via e-mail, internet, and teleconferencing ensures that all project elements are coordinated. Risk Mitigation (RM) plans are developed early, and preplanned descope "off ramps" maintain the project's cost and schedule integrity.

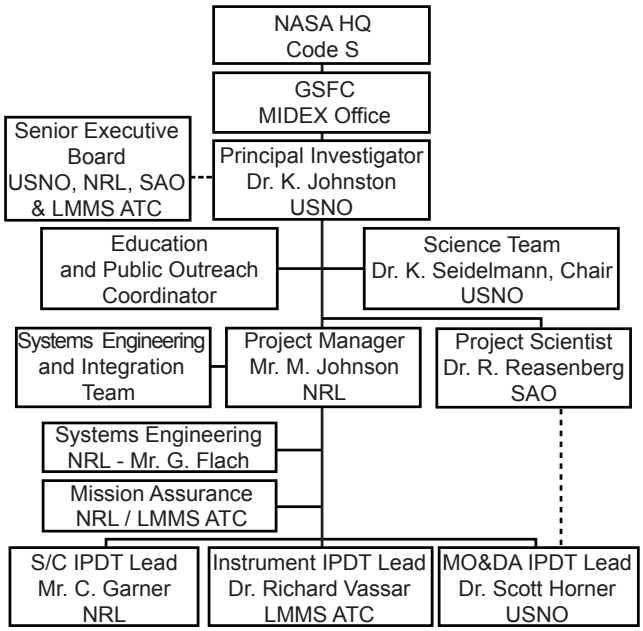

Figure 5-1. FAME Organizational Structure

5.1 Team Member Responsibilities.

5.1.1 Organizational Structure. Our management approach, structure, and organization (Figure 5-1) reflects experience gained from fast-paced, resource-constrained, projects. Table 5-1 summarizes our Team's organizational roles and top-level responsibilities. The PI consults with NASA's MIDEX office before changing key personnel, their roles and responsibilities, or their commitment to the project.

❒ Dr. Kenneth Johnston, the PI, is accountable for the FAME mission, including on-time and on-budget delivery of the instrument, S/C, GDS, MOC, SOC, and archival data products. He guides the mission's scientific aspects; and organizes the Science Team and scientific investigation, including prompt reduction and dissemination of data to the scientific community. His past leadership of USNO/NRL's NPOI efforts clearly demonstrates his abilities to manage "low cost, high-payoff" projects. He is responsible for achieving the Level 1 science objectives and recommending termination if these objectives cannot be met within reserves. The Science Team serves as the PI's scientific advisory body.

❒ Mr. Mark Johnson, the Project Manager (PM), is delegated complete authority and responsibility by the PI to successfully accomplish FAME's schedule, cost, and scientific performance goals. He is responsible for developing mission elements to a consistent set of requirements, supporting the Level 1 baseline agreed upon by the PI and Science Team, and assuring the budget and schedule are met. The PM is responsible for instrument and S/C delivery, integration and test, GDS, MOC, SOC, launch services support, and initial on-orbit EE&C and instrument commissioning.

❒ The Team is organized on an IPDT basis with designated team leaders for each engineering product area. The IPDT Leaders own their product area, and they are responsible for establishing a multi-disciplinary development team. They are empowered to make binding decisions implementing their strategies, and they are delegated authority to manage their component suppliers.

❒ The FAME organization employs a Systems Engineering and Integration Team (SEIT) working within IPDT process bounds. It is comprised of the lead scientists and engineers for each product area (Instrument, S/C, L/V, GDS, MOC, SOC, Mission Assurance, MO&DA), Science Team Chair, Project Scientist, and a dedicated Systems Engineer (NRL's Mr. George Flach). The SEIT structure provides horizontal integration across project elements to avoid "stovepipes" and to focus resources to achieve a common objective. The SEIT identifies, integrates, and validates technical requirements, and performs cost/performance trades. The PM leads the SEIT and is assisted by the System Engineer. The PM ensures that project cost and schedule aspects are maintained.

❒ A Senior Executive Board (SEB), comprised of executives from each parent organization, assures that institutional activities are aligned with the project's objectives. It is chartered to resolve top-level issues that conventional project mechanisms cannot successfully resolve alone.

5.1.1.1 Responsibilities and Key Positions. Relevant institutional experience and areas of responsibility are described in Section 5.1.1.2 and Table 5-1, respectively. Table 5-2 identifies key positions and their responsibilities. Section 5.1.1.2 describes each organization's relevant capabilities. During the CSR, we examined the project's staffing needs.

Table 5-1. Team Member Responsibilities

Org	FAME Mission Responsibilities
USNO	▪ Principal Investigator's Home Institution ▪ Lead organization for MO&DA ▪ Lead for GDS, MOC, & SOC Development ▪ Lead for Mission Ops, MOC, & SOC During Phase E ▪ Lead Institution for Education and Public Outreach
NRL	▪ Project Manager's Home Institution ▪ Mission Systems Engineering ▪ Lead for Mission Assurance, SR&QA, & CM ▪ S/C Bus Development, Integration & Test ▪ S/C-toP/L Integration and Performance Test ▪ Comprehensive Performance & Environmental Test ▪ Support GDS and MOC Development ▪ Support Processing and Launch Services ▪ Provide GDS and Support MOC during Phase E
LMMS ATC	▪ Design, Fabricate, Test, Calibrate, Deliver, and support Instrument Commissioning ▪ Support to Mission Ops & SOC during Phase E for Instrument Analysis & Data Interpretation
SAO	▪ Project Scientist's Home Institution ▪ Lead for Data verification and algorithm development ▪ Support Institution for Education & Public Outreach ▪ Synthesis and Verification of Scientific Measurement System

We identified sources for all personnel required to meet the project's needs.

❒ USNO, as the PI's home institution, provides access to all personnel, material, and facilities necessary to execute the FAME investigation according to this CSR and AO-98-OSS-03.

❒ NASA provides funds to USNO who then funds all FAME institutions. The PI delegates acquisition responsibility and authority to NRL for Phase B/C/D instrument, S/C, and GDS acquisition. USNO oversees all Phase E contracts. Use of reserve funds by NRL's PM is subject to PI approval, and the mission budget or reserves may be adjusted among product areas. All funding reductions for E/PO activities are approved by NASA.

❒ NRL oversees funding for the instrument, S/C, and GDS acquisition via existing and new competitive contracts. Established Cost Performance Reporting (CPR) formats are required. For each contract, NRL develops a SOW with product assurance approach and defined deliverables.

❒ USNO and NRL performed a competitive instrument supplier selection using a BAA issued under FAR paragraphs 35.016 and 6.102(d)(2). LMMS ATC was selected by the process to provide personnel, supplies, and facilities necessary to develop and conduct the instrument portion of the FAME investigation. Specific instrument parameters, baselined in a Subsystem Allocation and Requirements Document (Foldout 6, Figure A) are developed during Phase B to support verification.

❒ NASA provides launch services with funding identified within this CSR.

❒ NRL provides system engineering and mission assurance; designs, develops, and delivers a S/C bus; performs S/C and instrument integration and final system calibration; performs CPET; and provides the BP Ground Station. NRL supports L/V integration with the S/C, and provides on-orbit EE&C with support from LMMS ATC for instrument commissioning. After EE&C is complete, the S/C is operated by the MOC with connectivity to USNO's SOC provided by NRL's GDS.

5.1.1.2 Relevant Institutional Experience. Our IPDT and Science Team encompass USNO, NRL, LMMS ATC, SAO, and other institutions. Our team brings with it an extensive and impressive background in astrometry, astrophysics, space science, S/C engineering, instrument development, and mission operations. Table 5-3 lists relevant institutional experience.

5.1.2 Key Personnel. FAME is organized using experienced personnel with the authority and responsibility to ensure meeting science, technical, schedule, and cost objectives. Key positions and other personnel are described in Foldout 6, Table A. Each has prior experience in similar positions and has worked on successful spaceflight programs. Any changes in key personnel are determined by the relevant organization subject to PI and PM approval. Relevant experience is the key qualification factor for personnel selection. Our IPDT approach assigns responsibility and authority to the scientist or engineer closest to the work.

5.2 Management Processes and Plans. The PI and PM establish an effective management approach concurrent with Phase B to assure that NASA and FAME project performance requirements are satisfied within the cost and schedule limitations. A project plan, written during Phase B, follows NASA's *NPG 7120.5a, Program and Project Management Processes and Requirements* guidelines. It addresses resource management, information technology, risk and performance management, process metrics, and acquisition management. The document is submitted at PDR, and updated periodically with NASA concurrence.

5.2.1 Management Processes. FAME applies proven methods and tools to baseline the IPDT process. Our approach includes a formal requirements development process, design baseline management, a verification compliance matrix, technical performance metrics, internal and external peer reviews, detailed schedules, cost models, and weekly status meetings. Acquisition responsibility resides with the IPDT leads and the SEIT provides technical support. Each contract is managed by a Contract Officer and a Technical Manager assigned by the PM. The SEIT maintains oversight of major procurements and contract schedule performance. Major items are selected via competi-

Table 5-2. Key Personnel & Advisory Teams

PI	▪ Dr. K. Johnston, USNO: Oversight and Scientific Direction; Mission Success Responsibility
PM	▪ Mr. M. Johnson, NRL: Program Execution, Business Management and S/C Development
SEB supports FAME's PI	▪ Dr. K. Johnston, USNO ▪ Mr. P. Wilhelm, NRL ▪ Dr. I. Shapiro, SAO ▪ Mr. T. Morton, LMMS ATC
Science Team Coordination	▪ Dr. K. Seidelmann; USNO; Chairman ▪ Dr. R. Reasenberg; SAO; Deputy Chairman
SEIT supports FAME's PM	▪ Dr. S. Horner; USNO; MO&DA ▪ Mr. G. Flach; NRL; Systems Engineer ▪ Mr. C. Garner; NRL; S/C Manager ▪ Dr. R. Vassar; LMMS ATC; Instrument Manager ▪ Dr. R. Reasenberg; SAO; Project Scientist ▪ Dr. P. K. Seidelman: USNO; Chair ▪ Mission Assurance Manager

Table 5-3. Relevant Institutional Experience

▪ United States Naval Observatory: Founded in 1830 and located in Washington, DC., USNO fulfills a number of essential scientific roles for the US, Navy, and DoD. It maintains the US's master clock, measures the Earth's rotation and orientation, determines the positions and motions of the Earth, Sun, Moon, planets, stars, and other celestial objects, and assembles this information into catalogs to establish and maintain reference frames. USNO personnel have broad experience analyzing astrometric data of all types. In addition to catalogs compiled from classical transit circle and photographic surveys, USNO recently assembled S/W pipelines for astrometric data reduction from NPOI and the Sloan Digital Sky Survey.
▪ Naval Research Laboratory: A Federal Executive Agency located in Washington DC., NRL is the Navy's corporate research laboratory. It has an extensive history of spaceflight developments with more than 80 satellites and 32 launches. NRL maintains resources supporting all phases of development, integration and test, and operations. NRL developed the highly successful Clementine satellite, a fast-paced, low-cost mission. NRL currently is developing ICM, WindSat, and NEMO.
▪ Lockheed Martin Missiles and Space Advanced Technology Center: LMMS ATC, the principal research and development organization of the Lockheed Martin Corporation, is a world-class provider of advanced scientific and space technologies, prototypes, and research for physical, engineering, information/computing, materials, electronic, electro-optical, and other applications. LMMS ATC is a major contributor to the development of numerous sophisticated systems, ranging from smart materials that absorb radar waves to satellite telescopes used to measure solar phenomena.
▪ Smithsonian Astrophysical Observatory: Headquartered in Cambridge MA, SAO is joined with the Harvard College Observatory to form the Harvard-Smithsonian Center for Astrophysics (CfA), where more than 300 scientists are engaged in a broad program of research in astronomy, astrophysics, Earth and space sciences, and science education.

tive procurements using firm-fixed price or award fee contracts. Existing NRL contracts provide technical services, suppliers, and materials. Commercial standards are preferred, and NASA/Military standards are used if industry standards are not available or acceptable. Critical subcontracts are subject to the PM's approval. Supplier's must have a proven record of meeting cost and schedule constraints. Our heritage managerial approach examines technical and program events and ensures our capability to achieve mission goals. The PI and PM receive frequent status of progress, achievements, schedules, and cost.

❒ *Systems Engineering and Integration Team:* The SEIT integrates project management and systems engineering's technical, cost, and schedule goals, and provides cost-effective identification of conflicting interfaces, requirements, design products, and schedules. It also integrates cost and schedule needs with project reserves. The Systems Engineering Management Plan (SEMP) documents and reflects the output of this effort.

❒ *Design Reference Mission:* FAME used a DRM for the CSR to derive size/mass/power and data parameters, error budgets, and on-orbit observation timelines. It supports ongoing trades, analyses, and alternative studies crossing IPDT boundaries to ensure trade results reflect the optimal system solution. The DRM is updated in Phase B.

❒ *Requirements Development, Analysis, and Synthesis:* The SEIT analyzes needs, objectives, and requirements to determine the functional and performance requirements for each primary mission function and interface. These traceable design requirements are synthesized to: (i) define and allocate functions to the system elements; (ii) define internal and external interfaces; (iii) identify critical parameters; (iv) define system and element solutions to a level that enables verification; and (v) translate the architecture into a specification tree, a WBS, specifications, and a configuration baseline. Major trade studies are defined, conducted, and documented. Results are documented in the Mission Requirements Document (MRD) shown in Foldout 6, Figure A. The MRD contains specific Level 1 mission objectives, design criteria for the full range of mission needs, and key referenced documents and/or agreements. It is baselined at SRR and updated at CDR to reflect design changes or descope options. The SEIT creates project-level documents (Foldout 6, Figure A), RM plans, and maintains the mass properties, all of which are provided at PDR with CDR updates.

▫ The SEIT verifies that engineering products (S/C, Instrument, L/V, GDS, MOC, SOC, and MO&DA) and processes satisfy requirements (including interfaces) from the lowest level and that they can be implemented. The SEIT IPDTs perform this activity and integrate requirements vertically and horizontally. The SEIT measures technical progress, evaluates and recommends alternatives, and documents data and decisions.

▫ The SEIT ensures that system-level analyses, including performance, reliability, risk, contamination, EMI/EMC, L/V compatibility, and Failure Modes and Effects Analyses (FMEA) are accomplished. Contamination and EMI/EMC guidance is established before PDR. Preliminary analyses are provided at PDR with CDR updates.

▫ A formal Verification Compliance Matrix database ensures that the totality of analyses and tests fully verify FAME's capability to meet specified system performance and operational requirements. The SEIT identifies verification requirements at the PDR and baselines these at CDR.

❒ *Technical Performance Metrics:* The SEIT develops TPMs to identify and monitor key system resources, parameters, and reserves. These include cost, mass, power, propellant, processor throughput, memory usage, and pointing knowledge (including jitter budgets). TPMs are baselined at SRR and updated as the project evolves. If the margin required for a given project phase is not maintained, the SEIT and the PI take corrective action.

❒ *Configuration Management:* NRL's established CM system identifies and controls configuration throughout the project life cycle (Section 4.9.1.2 and Figure 4-44). These same requirements flow down to the instrument supplier. The SEIT is responsible for system baseline control, and NRL is responsible for mission CM processes. Hardware and flight S/W configuration is managed throughout development, integration, test, and launch to ensure a seamless transition to MO&DA with minimal impact (Table 5-5). CM documentation is stored electronically on a database on the project website. CM maintains a password-protected database to provide access and status docu-

ments via the Internet. Two levels of change control via a formal CCB are baselined. The PM chairs the CCB. Class I changes affect S/C-to-L/V and S/C-to-Instrument interfaces, and mission performance requirements. Class II changes are internal to the Instrument or S/C and are transparent to, or do not affect, external interfaces or performance. We provide a CM plan at PDR.

❒ *Schedule Management:* An Integrated Master Schedule (IMS) is established during Phase B and includes top-level network schedules, critical paths, and detailed supporting schedules. The PM maintains the IMS and each IPDT Leader develops and maintains supporting schedules. Progress is reviewed weekly by the PM during scheduled meetings, who provides status to the PI.

❒ *Team Coordination and Communicatio*n: We hold weekly telcons among the PI, PM, and the IPDT Leaders. Agendas, meeting minutes, and project information are transferred rapidly via a password-protected project website. NRL uses this process on ICM, NEMO, and WindSat programs, and has in-place templates and databases. Our site provides immediate access to CM status, schedules, and to an on-line project library.

❒ *Progress Reporting:* During each weekly meeting, the status of project progress, cost and schedule data are reviewed.

❒ *Periodic NASA Reporting:* USNO submits Monthly Progress Reports using narrative text, graphs and/or schedules (Table 5-4). The Report is submitted in hard copy, made available via the project website, and presented via teleconference or presentation. The location of any monthly presentations is determined by mutual consent of the PI and the MIDEX Project Office. USNO, together with NRL and LMMS ATC, conduct Quarterly Status Reports (QSR) with the MIDEX Project Office. These reviews include summary information on technical, cost, schedule and other issues, and they are conducted at the MIDEX Project Office or at a FAME project facility.

▫ *Financial Reporting:* USNO submits monthly and quarterly (533M and 533Q or equivalent) financial management, or equivalent, reports as described in NPG 9501.2B *NASA Contractor Financial Management Reporting*. Reports are prepared using the WBS and cost element structures contained in the CSR, or as mutually agreed upon. Financial management reporting are provided at the total resource (Level III) and by cost element for (Level II). Reporting is required for first-tier contracts using NASA FAR Supplement Section 18-42.7201 (b) (1) guidelines. USNO/NRL provide contract funding profiles, and explain variances between projected and actual costs (see Section 5.6 for additional information).

Table 5-4. Monthly Report Content

Summary Status: ▪ Summarize current contract and schedule status. Identify any anticipated changes in scheduled milestones. ▪ Provide status of critical path items and report schedule slack. ▪ Provide status of mission critical technical resources, including margins or reserves. ▪ Provide current status of mission cost reserves, including liens.
Major Accomplishments: ▪ Summarize achieved accomplishments vs. planned accomplishments for the previous month ▪ Detail planned accomplishments for the next month.
Current Problems: ▪ Present a "Top Ten" list of problems. ▪ State progress toward solving problems previously identified and discuss new problems that have been identified during the past month, including schedule for resolution. ▪ State whether assistance from MIDEX Project Office is required. ▪ Identify work around positions if a problem has significant impact on on-time completion or on critical scheduled milestones.
Problem Avoidance: ▪ Recommend any action that would assist in preventing major potential problems from developing.
RM Status Report: ▪ Update list of the high risk items, discussing any RM actions that were implemented and a status of upcoming risk decision points.
▪ Facility Status Report: Discuss the status of facilities.

❒ *Performance and Resource Management:* Our Performance Management System (PMS) integrates resources and cost via the WBS, schedule via the IMS, and technical performance via IMS milestone entry/exit criteria and TPMs (Section 5.2.1). It provides WBS traceability and is consistent with the IMS. It supports reserve and budget allocations, cost accumulation, and performance reporting (Section 5.4.1). For the CSR, we mapped our technical approach and IMS to the WBS, assigned responsibilities to the IPDT Leaders, and tailored our PMS approach commensurate with the project's size and scope. The PMS is updated in Phase B and provided at PDR.

5.3 Schedules and Work Flows. The CSR master schedule (Foldout 7, Figure A) establishes task interrelationships, time phasing of events and key activities. These activities and flows support the IMS developed in Phase B. Schedule sequences and durations are consistent with NRL and LMMS ATC experience and FAME's planned staffing levels. A Level 1 milestone schedule, jointly devel-

Table 5-5. Defined CM Processes

- CM Planning: Contained in the Phase B SRR Briefing
- CM Identification: Baselined incrementally with released documentation status and sources maintained via webpages
- Change Control: The CM Representative facilitates intra-IPDT coordination, and the SEIT pre-approves changes before processing; PM approves all classification of changes; CM Change Board (CCB) includes PI review for Class I Changes with NASA concurrent; Disciplined redline process used for Class II Changes
- Status Accounting: Class I changes maintained using an on-line computer database; Class II changes maintained via existing redline change process
- CM Audit: Ensures compliance with requirements via verification compliance matrix; Verifies physical configuration via review of Engineering vs. "As-Built" Configuration List (ECL/ABCL)

oped by the PM and the IPDT, is approved by the PI during Phase B. Any changes to Level 1 milestones are approved by NASA.

❒ *Schedule and Longlead Activities:* Foldout 7, Figure A identifies all major activities, critical path items, schedule margins, and delivery dates. Table 5-6 lists critical EEE and their leadtimes. We anticipate placing cancellable orders shortly before PDR for those items with 12 months leadtime.

Table 5-6.Critical EEE Leadtimes

CCDs	12 mo.
Connectors and Filter Pins	12 mo.
RAD6000 Processor	12 mo.
DC-DC Converters	10 mo.
Semiconductors	8 mo.

5.4 Risk Management. We baselined a formal process to identify and assess the probability and implications of risks as they pertain to the mission. Our primary RM approach is: (i) identify and mitigate the "top 10" risks listed in Foldout 6, Table C; (ii) use of cost reserves to "back-up" program risk areas; and (iii) use of program descope options should reserves be insufficient. The PM maintains a "risk watch" list and reviews risk status with the SEIT monthly. The PM and the SEIT develop and categorize risk severity, and formulate mitigation plans for the PI. The PI oversees the RM process.

❒ *Technical Risk Identification*: This process is formalized in Phase B. Foldout 6, Table C lists "top ten" risk areas that may impact cost, schedule, performance, or science objectives. It provides a subjective rating of RM difficulty. Risk is rated high when it is difficult to mitigate or when it greatly impacts project cost, schedule, or performance. The key to manage risks is resolving performance and schedule issues before CDR.

❒ *Descope Options:* The descope options are listed in Table 5-7. If several of the mission top ten risks are not mitigated, then descope options will be necessary. A formal risk analysis is performed in Phase B with updates in Phase C/D. Our descope options follow agreed-upon processes (Section 5.4.2). If mission descope is considered, the PM provides the PI with a set of decision options and recommended actions. The PI determines the appropriate course of action (Section 5.4.2).

Table 5-7. Descope Option

Area	Descope	Science Impact	Savings
S/C	Reduced S/C	Reduce position, parallax accuracy to 80 μas	$6Mil
Instrument	Reduce Optics and Focal Plane		

❒ *Qualification of New Technologies:* New technology H/W is flight-qualified using tailored tests and analyses. Design and test history reviews determine suitability for use. We perform selective radiation screening for EEE parts without flight heritage. Table 5-8 lists new technologies and planned qualification approaches.

Table 5-8. New Technology Qualification

	New Technology	Verification and Qualification Plan
Instrument	▪ Astrometry Using CCD Focal Plane Arrays	▪ Procure candidate CCD and verify performance. Extensive M&S of characteristics data type. ▪ Procure CCD in Phase B to verify performance
Spacecraft	▪ Solar Torque Precession	▪ Extensive M&S of system parameters ▪ Extensive deployment tests of solar arrays in simulated zero-g environment under hot/cold, and vacuum conditions.
	▪ Composite S/A Substrate & Panel	▪ Procuring qualification test panel and sample cells to be subjected to shock, vibration, and thermal cycling tests.

5.4.1 Integrated Financial Performance Measurements. We establish a integrated Earned Value Measurement System (EVMS) using MicroFrame and MS Project during Phase B. We maintain a program financial log that includes management reserve, undistributed budget, planned/actual reserve usage as a function of schedule, actuals by resource or element of cost, and start/stop dates. We baseline standard reports, including variance analysis, cost performance, and cost/schedule/funds. These same requirements flow down to LMMS ATC. The IPDT Leaders, identify, track, and report on their use of reserves to the PM.

5.4.2 Reserve and Margins. Defined funding reserves and resource margins account for design and development uncertainty. Decisions that change system performance parameters and/or critical paths are coordinated among the SEIT, the

PM, and the PI through weekly meetings on status, problem resolution, and resource allocation. Trade studies provide insight on the impact of alternatives on schedule and technical performance.

❒ *Reserve Management:* Reserves are held specifically to alleviate unforeseen problems that can occur during Phase C/D/E. The PI approves any change in scope, funding, or performance based on trade study results. He makes all decisions impacting mission requirements and thresholds (e.g., science return, cost, schedule). The PI authorizes the PM to release reserves. Residual cost reserves are used to enhance the science return.

❒ *Mission Descope*: Decisions involving descope options reside solely with the PI acting with the advice of the Science Team. If reduced mission performance is identified during Phase B/C/D, the PI proposes a "mission descope" to NASA for approval. Table 5-7 shows that a mission descope by CDR is primarily due to: (i) inability to predict and model the S/C's rotation via solar torque or thrusters; (ii) inability to acquire a sufficient quantity of CCDs; and (iii) inability to define the optic's performance. Any of these conditions result in a mission descope decision, resulting in a reduced capability instrument, and a reduced science mission. The descope option includes a smaller aperture, a focal plane populated by fewer CCDs, and a reduction in accuracy to 80 μas for stars brighter than 10th magnitude. Exercise of these descopes results in a $6M cost savings.

❒ *Schedule Reserves and Margins:* Our emphasis on network-based schedule management and EVMS drives schedule risks to the surface quickly. Each risk area and its effect on critical path is planned using a detailed subnetwork with frequent, short-duration objectives. We baselined funded schedule reserves for the S/C and each of its subsystems, and included a funded schedule reserve for the instrument. Table 5-9 summarizes schedule reserves and margins. The IPDT Leaders identify, track, and report on schedule reserve usage to the PM monthly.

5.5 Government Services and Facilities. No government furnished property, services, or facilities are required to support the mission. All government facility usage is on a "full cost recovery" as identified in Section 7.0.

Table 5-9. Reserves & Funded Schedule Margins

Phase	Project Element	Reserves ($Mil)	Schedule Margin (Mo)
B	Instrument Lon lead procurement	1.80	None
C	Instrument	2.40	1 Month for Major Component Deliveries & 1 Month for Test
	S/C	0.85	
	MO&DA	0.00	
D	Instrument	2.35	1 Month for System I&T
	S/C	2.40	
	MO&DA	0.00	
	Launch Services	0.00	3 Months

❒ *Launch Services: A* MedLite launch vehicle is provided by the NASA Launch Vehicle Office and funded within the FAME investigation.

❒ *Deep Space Network:* DSN usage is funded within the FAME investigation

❒ *Facilities:* USNO and NRL facilities constitute no additional project costs because their usage is paid under DoD's full cost accounting practices.

5.6 Reporting and Reviews. FAME uses streamlined reporting requirements, coupled with external reviews allowing the MIDEX Project office to maintain insight, understand progress, and to exercise independent oversight. We encourage informal weekly telecons with the MIDEX project office and its SR&QA representatives. Reports, reviews, and their supporting materials use internal project products and processes as practical. (Section 5.2.1 discusses monthly and quarterly progress reporting.) Periodic design reviews (Foldout 6, Table B) using NHB 7120.5a milestone reviews, are baselined. USNO, in collaboration with NRL and LMMS ATC, prepare technical data packages for distribution and presentation at the reviews. A NASA-appointed review panel conducts the reviews and advance presentation copies are submitted for review 10 days before the formal presentation. USNO and NRL jointly establish a review board responsible to evaluate the reviews and the project's status. This board includes individuals with extensive experience with spaceflight programs and is independent of the FAME Mission. The MIDEX Project Office is invited to attend all technical meetings and reviews conducted by the Mission Team. Review Item Discrepancies (RIDS) are formally tracked and dispositioned, subject to PI and NASA concurrence.

Table A. Summary of Key Personnel Roles, Experience, and Time Commitment

Name, Roles and Responsibilities, Relevant Experience, and Time Commitment	Address
Dr. Ken Johnston, PI: Section 5.1.1 fully describes the PI's roles and responsibilities. Dr. Johnson directs FAME's scientific, technical and business efforts. He is accountable to NASA for all decisions made and actions taken that impact the viability and quality of the program. ▪ Assigned 50% to FAME for Phases B/C/D/E	Scientific Director USNO 3450 Mass. Ave., NW Washington, D.C. 20392 (202) 762-1513
Mr. Mark Johnson, PM: Section 5.1.1 fully describes the PM's roles and responsibilities. He is responsible for program execution and accomplishment and reports directly to the PI. ▪ Mr. Johnson has served in progressive technical and managerial roles, including Deputy PM, Project Engineer, Systems Engineer, Electrical Systems Manager, and Lead Engineer for more than eight spaceflight programs, projects, and experiments of National significance. Mr. Johnson has progressive experience with advanced flight experiments like MPTB, HTSSE, and spaceflight missions like Clementine, Clementine II, LACE, and LIPS III. He has demonstrated design, development, and managerial expertise with advanced processors, telemetry and command systems, attitude control electronics, and the integration, test, and on-orbit operations. Mr. Johnson served as PM on NASA's TSIM CSR and FAME's CSR. He was the Deputy PM and Systems Engineer for MPTB, the Electrical Systems Manager for Clementine, and in a collateral role, served as the lead engineer for its S/C controller. He was the Project Engineer for HTSSE, and the Lead Engineer for LACE Electrical Systems, and the lead CT&DH/ADCS engineer for LIPS III. He designed the SLD mission GSE. Mr. Johnson serves on several technical advisory committees for DoD space programs, and he is the recipient of several awards, including NASA's Medal for Exceptional Engineering Achievement, May 1994. He is a Contracting Officer's Representative for $60mil of developmental contracts for spaceflight components. ▪ Assigned 100% to FAME for Phases B/C/D.	NRL, Code 8100 4555 Overlook Ave., SW. Washington, D.C. 20375-5000 (202) 767-0892 (voice) johnson@ssdd.nrl.navy.mil
Dr. Richard Vassar, Instrument IPDT Lead: Leads instrument development, design, fabrication, testing, and calibration to ensure achievement of science goals. Reports directly via incentivized contract to the PM ▪ Dr. Vassar has 10 years of program management experience and 22 years of space systems development experience. Most recently, Dr. Vassar was PM for the Gravity Probe B Payload and Deputy PM for the Gravity Probe B Space Vehicle. Dr. Vassar was responsible for the technical development, fabrication, assembly, testing, and delivery of the GP-B payload for Stanford University. He fulfilled significant technical roles on a number of spaceflight projects including SIRTF, Gravity Probe-B, Zenith Star, LODE, FLTSATCOM, and SLCSAT. These roles included PI for a SIRTF related IRAD program, error budgets and end-to-end error analysis for GP-B, lead control systems architect for Zenith Star, primary mirror facesheet control for LODE, ACS upgrades for FLTSATCOM, and developing a two satellite formation flying control system for FLTSATCOM. ▪ Dr. Vassar is an Associate Fellow of the AIAA. He was named the AIAA Outstanding Engineer of the Year—Astronautics by the San Francisco Bay chapter. He is a member of Sigma Xi, Tau Beta Pi, and other honor societies. He is a graduate of the LM Management Institute and the LM Supervisory Institute. ▪ Assigned 100% to FAME for Phases B/C/D	LMMS-ATC O/L9-23 B/251 3251 Hanover St. Palo Alto, CA 94304-1191 (650) 354-5113 (voice) richard.vassar@lmco.com
Dr. Scott Horner, MO&DA IPDT Lead: Leads MO&DA activities, overseeing GDS development and operation, SOC and MOC development, and coordinating the data analysis activities of the USNO and SAO during Phases B/C/D, and is directly responsible to lead Phase E efforts. He provides continuity during the transition from development to MO&DA. Reports directly to the PM during Phase B/C/D and to the PI during Phase E. He coordinates activities with the Project Scientist to assure that science data activities meet levied requirements. ▪ Dr. Horner is the former U.S. Project Manager for XMM Optical/UV Monitor with experience developing S/W for flight and ground H/W, GSE, and data analyses. He has previous experience managing the development of a distributed S/W data analysis system. He is an Astrophysicist who has conducted research in stellar structure and evolution, astroseimoogy, exoplanet detection, and ground/space astronomical instrumentation. ▪ Assigned 100% to FAME for Phases B/C/D/E.	USNO 3450 Massachusetts Ave., NW Washington, D.C. 20392 (202) 762-0381 shorner@usno.navy.mil
Mr. James C. Garner, Spacecraft IPDT Lead: Leads S/C development, design, fabrication, testing, instrument-to-S/C integration and test, CPET, and EE&C to ensure achievement of all mission goals during Phase B/C/D. Reports directly to PM. ▪ Mr. Garner is the Electrical Power System lead engineer for the ICM with direct responsibility for a budget over $10Mil. He was the Project Engineer for the Sodium Sulfur Battery Experiment flown on STS-87, and handed all range safety issues. He serves as the PE for NRL's TiPS power subsystem, for the development and qualification for NiH2 SPV and DPV batteries, and for the power subsystem flown on Clementine. He was the Electrical Systems lead engineer for two classified spacecraft, and supports those programs in an advisor capacity after the design was transitioned to industry. ▪ Mr. Garner is a member of IEEE and the Interagency Advanced Power Group. He served as Chairman, Renewable Energy Conversion Working Group, and serves on the NASA Aerospace Battery Steering Group Committee. ▪ Assigned 100% to FAME for Phases B/C/D	NRL, Code 8100 4555 Overlook Ave., SW. Washington, D.C. 20375-5000 (202) 767-9075(voice) garner@ssdd.nrl.navy.mil

Table B. Design Reviews

Review	Exit Criteria
Systems Requirements Review (SRR): Describe/assess design approach, and verifies mission requirements are satisfied. Includes preliminary MRD and CONOPs, Level 1 requirements, initial design and top-level system trades, alternate configurations, systems analyses, environments, top-level test and calibration plans, mission assurance plans, and critical parts lists.	▪ Output includes defined SOWs and design requirements for major acquisitions like CCDs, S/As, and EEE Parts
Preliminary Design Review (PDR): Confirms that requirements, allocations, and specifications meet mission objectives. Includes final MRD and CONOPS, refined science requirements, draft ICDs, and draft segment specifications; Lists high-risk items and presents a prioritized mission descope plan; SR&QA, CMS, and Verification Plans are presented; H/W, S/W, GSE, and ground are addressed.	▪ Completion baselines mission design.
Critical Design Review (CDR): Confirms that designs are ready for manufacturing, implementation, integration, and testing with acceptable risk; Technical problems and design issues are resolved without impacts to performance, reliability, or safety. Addresses all design areas.	▪ Completion freezes design, and results in fabrication and formal S/W coding, integration, and testing.
Test Readiness Review (TRR): Takes place before CPET to evaluate H/W status, and review plans. Confirms assembly and subsystem-level testing. Evaluates each deliverable's status integration.	▪ Completion results in approval to proceed with CPET.
Flight Readiness Review (FRR): Takes place before shipment to launch site. Emphasizes CPET performance results, and demonstrates meeting system requirements. Reviews ground systems, flight operations plans, and other operational I/Fs to assure support of on-orbit flight operations.	▪ Constitutes system acceptance. ▪ NASA approval to ship to launch site.

FOLDOUT 6

Table C. Top 10 Risks, Mitigation Approach, and Scientific Impact

Area	Risk Description	Risk Category	Mitigation Approach	Decision Point	Scientific Impact
S/C	▪ Rqmt: Extremely Low Jitter ▪ Risk: Unanticipated (unmodelled) S/C Jitter Sources	Med Perf Risk	▪ Improved Modeling	PDR/CDR	Reduced Astometric Accuracy
Instr.	▪ Rqmt: Optics PSF Performance ▪ Risk: Variations due to optical component shifts & compound mirror	Med Perf Risk	▪ Maintain temperature stability on optics to <60 mK	CDR	Reduced Astrometric Accuracy
S/C	▪ Rqmt: Solar Torque Rotation ▪ Risk: New technology approach fails or Unmodelled Solar Flux Variations	Med Perf Risk	▪ Baselined Propulsion Backup mode capable of 2 1/2 yrs continuous operation ▪ In-flight Calibration	PDR/CDR ▪ Trade studies, Modeling & Simulation to predict performance	Reduced Astrometric Accuracy
Instr.	▪ Rqmt: CCD Performance ▪ Risk: Changes due to radiation dosage	Med Perf Risk	▪ Radiation shielding included in baseline design	CDR ▪ Prototype CCD demonstration	Reduced Astrometric Accuracy
GDS	▪ Rqmt: Continuous Data Downlink ▪ Risk: Data Rates, coupled with 24 hour contact times allow data dropouts	Low Perf Risk	▪ High Link Margin	PDR	Loss of some data
Instr.	▪ Rqmt: Full CCD Chipsets ▪ Risk: Cost Growth	Med Perf Risk	▪ Use Fewer CCD Chipsets	PDR	Reduced Astrometric Accuracy >12 mag.
MO&DA	▪ Rqmt: Two 1/2 Year Mission Life ▪ Risk: Single string Instrument with selectively redundant S/C and instrument	Med Perf Risk	▪ Early FMEA, ▪ Degraded ops modes	PDR/CDR	Loss of some data
MO&DA	▪ Rqmt: S/C velocity tracking errors ▪ Risk: S/C errors too large to model	Med Perf Risk	▪ Micro-arcsecond Data Analyis Algorithms ▪ Use of ground optical Tracking to improve algorithm performance	CDR	Reduced Astrometric Accuracy
MO&DA	▪ Need for 24 hour continuous observation contacts	Medium Ops Risk	▪ Backup antenna available at BP	CDR	Loss of some data
S/C	▪ Rqmt: Point 45 deg away from Sun ▪ Risk: Unintentional Sun Stare	Low Perf Risk	▪ Optics covered until on-station ▪ Safemode (lifeboat) points Optics away from Sun	PDR	Loss of mission

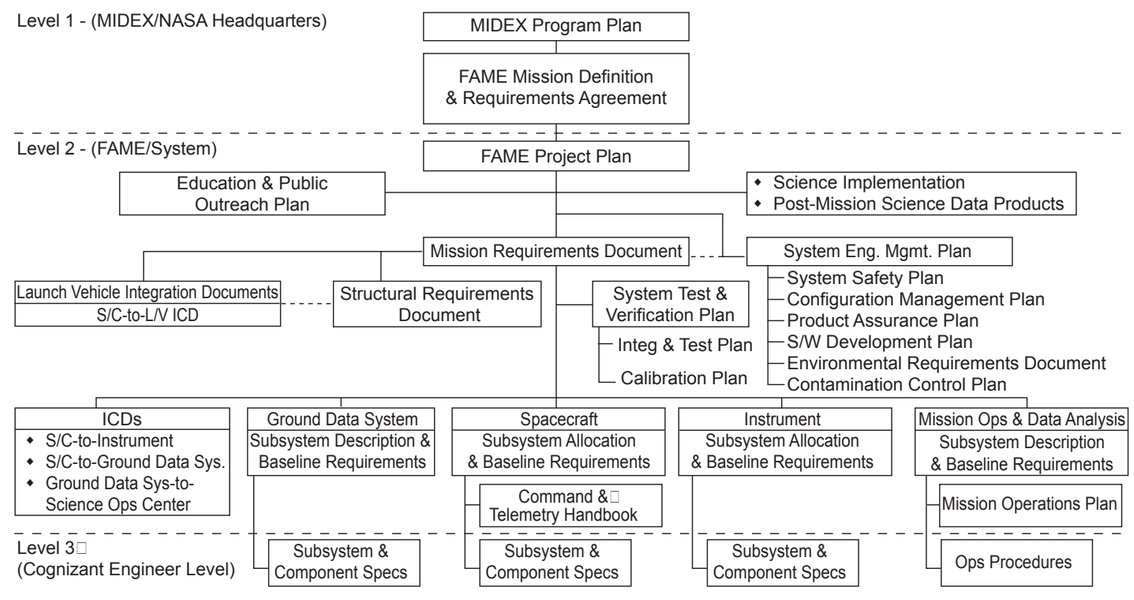

Figure A. FAME's Streamlined Document Tree Captures Project Requirements

FOLDOUT 7

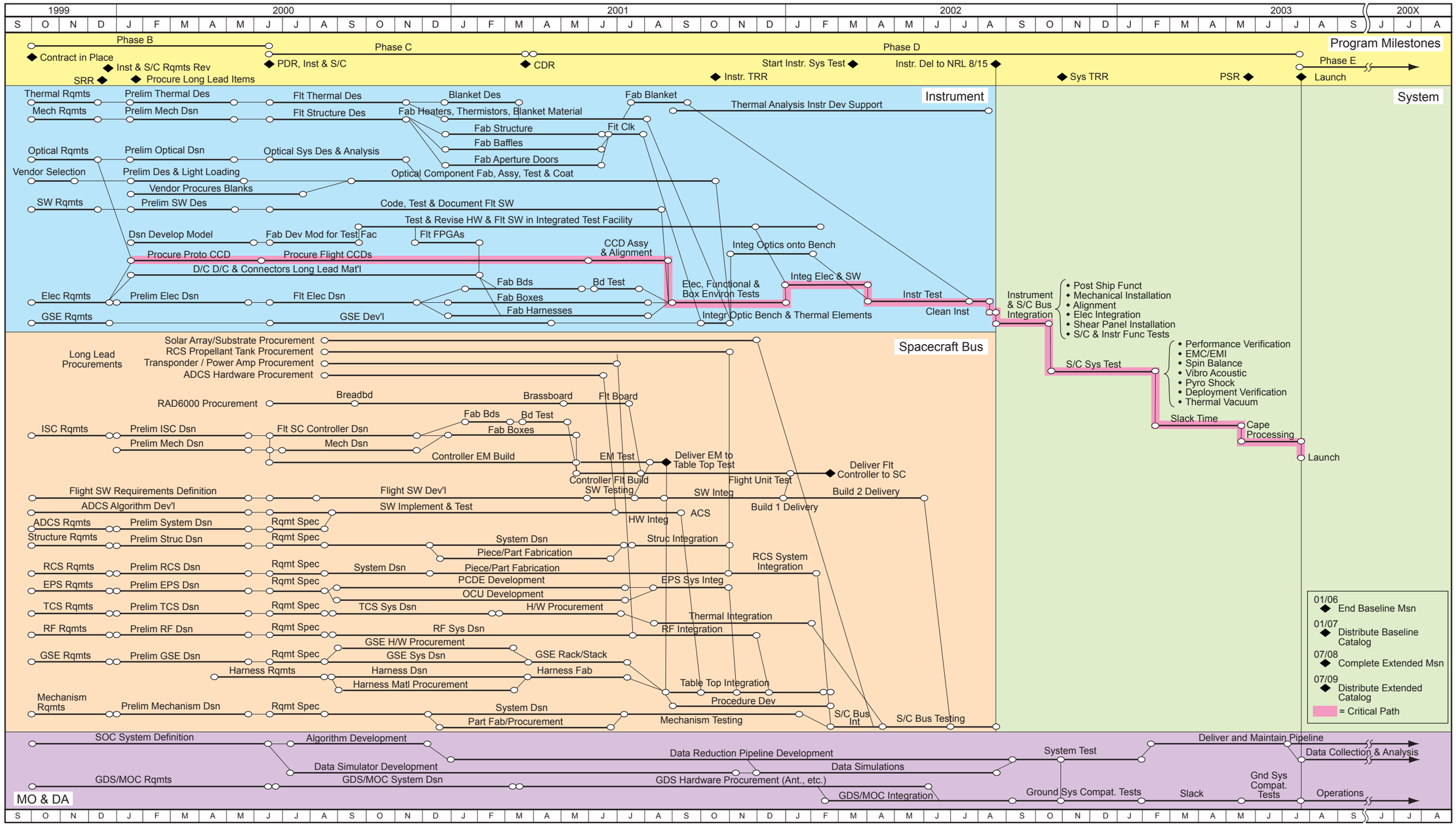

Figure A. FAME Master Schedule

6. Technical Definition (Phase B) Plan

6.1 Plans and Products.

6.1.1 Plans. Phase B concentrates on completing key trade-offs in the design of the instrument and S/C (discussed in Section 4.0). Notable among these are the choices to be made on CCD implementation. CCD development is the one long-lead development item underway during this phase. Preliminary design, tolerancing, error budgets, and requirements definition are conducted. Management and technical documents for completion by PDR will be prepared. A Contract End Item Specification, refined scientific investigation plan, and Performance Measurement System elements including WBS to Level 4 will be prepared. Support to the various working group meetings and progress reviews will be provided. Initial planning for the FAME mission will take place. This phase concludes with the PDR.

The FAME Phase-B Study culminates in combined Preliminary Design and Cost Reviews (PDR/CR) that serves as a Confirmation Review for Phases C/D/E. PDR/CR is expected to consist of a Non-Advocate Review (NAR) style programmatic effort. Contingent upon successful completion of the PDR/CR and NASA's confirmation, the MIDEX Project Office contracts with USNO and the FAME Mission team to proceed with Phases C/D/E. To allow for formal confirmation without mission delay, the FAME Mission Team will, with MIDEX approval, begin to design and develop the flight and ground control segment immediately following the PDR/CR.

❒ *Project Management Approach:* As the focal point for the MIDEX Project Office, the PI is responsible for mission success. The PI designates an NRL Project Manager (PM) and delegates the requisite responsibility and authority to manage and administer Phase B tasks. This individual ensures that all Phase B objectives are met within schedule and cost constraints, including timely progress reporting. With USNO concurrence, NRL establishes, implements, and maintains a management system that integrates management disciplines (scientific and technical) and functions. This system contributes to achieving a range of objectives, such as cost-effective planning, organizing, controlling, and reporting. The MIDEX Project Office approves any funding for long-lead part purchases made before official confirmation. The MIDEX Project Office expeditiously receives Project Documents, and Memoranda of Understanding for review and comment.

❒ *Schedules:* Consulting with the PI, the PM establishes, implements, and maintains an IMS and derivative detailed schedules that establish the interrelationships and time-phasing of essential activities and events, and identify critical paths and schedule slack. The master level-1 schedule (see Foldout 7) constitutes the "baseline" schedule and is under configuration control.

❒ *Progress Reports:* USNO submits Monthly Progress Reports using narrative text, graphs, and/or schedules (see Table 5-4). The report is submitted in hard copy, made available via the project website, and presented via telecon or presentation. Together, the PI and the MIDEX Project Office determine the location of monthly presentations.

❒ *Reviews:* Collaborating with NRL and LMMS ATC, USNO prepares technical and programmatic data packages to be distributed and presented at the SRR and PDR/CR. A NASA-appointed panel receives advance materials before the formal presentation and reviews the content. USNO and NRL jointly establish a review board to evaluate the SRR and PDR/CR and project status. Individuals with extensive spaceflight program experience are included on the board, which is independent of the FAME Mission. The Mission Team conducts technical reviews, and the MIDEX Project Office is invited to attend.

6.1.2 Products. During Phase B, USNO and its mission team provide the facilities, materials, services, and personnel necessary to further define the FAME mission (see Table 6-1).

6.2 Key Mission Trade-offs and Options. We continue to refine the preliminary design, investigate alternate mission and system concepts, and develop descope options. During Phase B, we perform mission trades and studies (Table 6-1). An SRR is held with NASA to ensure that all participants understand the requirements. A PDR/CR is held with NASA and the MIDEX community to confirm: (i) that the system design approach satisfies the functional baseline; (ii) risks are mitigated with closure plans; and (iii) the system is ready for detailed design and fabrication. Phase B deliverables are shown in Table 6-3.

Table 6-1. System Studies

Refinement Studies	▪ Complete the FAME system preliminary design. ▪ Develop a final instrument ICD that includes all S/C electrical, mechanical, and thermal accommodations, along with instrument operability issues (e.g., data volumes, command sequences). ▪ Identify primary interfaces, and develop outline interface definitions, including a preliminary L/V ICD. ▪ Identify long-lead items, and refine the schedule to minimize their potential impact on the S/C and Instrument. ▪ Specify operational radio frequencies and obtain authorization to use that frequency. ▪ Work with NASA to define the launch services (mass, envelope, injection accuracies, and integration requirement). ▪ Prepare ICD with L/V and up and down link.
Trade Studies and Design Alternatives	▪ Refine and specify CCD detector and readout technology requirements in terms of speeds, quantum efficiency, noise, and availability ▪ Identify issues associated with solar torque precession, including the mechanism deployment, on-orbit adjustments, optical emissivity, variability, and third-body effects. ▪ Evaluate “Start-Stop” technology to replace the ND filters. ▪ Evaluate and optimize photometric filter parameters. ▪ Further evaluate focal length, spin rate, precession rate, and FOV for accuracy improvement. ▪ Develop thermal requirements and evaluate alternate design concepts. ▪ Study alternative sizes of the S/A panels, mission impacts, and cost/benefit/risk. ▪ Perform trade studies on the mechanisms and actuation devices used to correct low-order torque perturbations. ▪ Investigate alternative methods to determine S/C position and perform navigation via on-board systems. ▪ Identify and evaluate potential single-point failures, mitigation actions, and design alternatives for degraded modes. ▪ Define the fault-protection architecture in terms of modes and degraded operations. ▪ Investigate and define stressing environments in terms of thermal, jitter, vibration, solar flux variations, and shock. ▪ Evaluate and specify contamination control needs for materials selection and environmental control. ▪ Evaluate and refine different methodologies of data analysis using further simulations to ensure robust systems. ▪ Evaluate RF designs, including EMI/EMC effects, analysis of luni-solar effects, and perturbations to orbit altitude. ▪ Address mirror-specific technology issues like materials, fabrication, surface figure quality, and vibration isolation. ▪ Develop the optical prescription for all optics. ▪ Develop and test hardware and software data storage and compression schemes and formats, and trade against downlink data rates, the robustness of algorithms, and potential for loss of information. ▪ Develop a preliminary dynamic S/C model to estimate system pointing control performance. ▪ Develop and refine S/C specifications (e.g., power, telemetry, pointing control, jitter, aspect accuracy) based on systems requirements, and proposed component capabilities. ▪ Obtain component capabilities from suppliers, and trade options for acquiring and packaging S/C subsystems. ▪ Evaluate the radiation requirement and study alternate components for the S/C and for instruments. ▪ Investigate the use of an accelerometer to determine the spin axis and CG. ▪ Investigate the use of a Lithium Ion battery. ▪ Solicit technical proposals and detailed costs on major S/C subsystems and components; evaluate and refine systems concepts based on proposed capabilities. ▪ Evaluate alternate ground architectures and cost/benefit/risk trade-offs to add autonomy to S/C, instrument, and MOC to reduce staffing and lower costs. ▪ Evaluate orbit alternatives and obtain permission for specific orbital slots ▪ Optimize data base and analysis system.

Table 6-2. Phase B Products

▪ FAME level 2 requirements including science, instrument, S/C, GDS and mission operations, to be included in the MRD; ▪ GDS concept and operations plan including the ground station and MOC; ▪ A MOC GDS specification, a S/C performance specification, and an Instrument performance specification; ▪ Preliminary design of the instrument, S/C, and GSE; ▪ Preliminary I/F agreements between the S/C and instrument, and between the flight segment and ground segment; ▪ Support preliminary L/V I/Development; ▪ An SDP for the mission; ▪ Hold a combined Instrument and S/C SRR in December 1999, with the objective to start cancellable acquisition of critical long lead items (CCDs) in January 2000; ▪ Perform mission trades and any technology demonstrations required during the definition phase; ▪ A RM system, documented in the Phase C/D/E Project Plan, to identify high-risk items and associated mitigation plans; plans, if any, for flight spares to mitigate risk during instrument, S/C, I&T; and a Descope Plan defining a prioritized descoping of the mission from the Baseline Science Mission to the Minimum Science Mission, including latest practical decision dates, if a forecast of cost, schedule, or technical margin erosion occur. It includes a list of critical milestones, at least one per quarter, that if not met will result in formal consideration of a descope or a major review for descoping. ▪ A set of recommended TPMs for program evaluation by NASA and the mission team, including cost and schedule factors; ▪ Establish a PMS and a financial EVMS, that incorporates the TPMs, the WBS, and the IMS. ▪ If authorized by NASA, order long lead parts or take other measures to reduce schedule risk; ▪ SEMP, and its supporting plans (PAP, SR&QA, Contamination, Environments) ▪ Monthly progress and financial reports, as discussed in Section 5.6; ▪ CM plan for managing and controlling the design, fabrication, test programs, and all other CM activities; ▪ Updated Phase C/D/E Project Implementation Plan and an updated Cost Plan that include the following: ▪ A revised Cost Plan with supporting data, in the same format and level of detail as required by the MIDEX CSR in real year dollars, that separately reflects costs for Phases C/D and E and includes a fully executed SF1411; ▪ A Mission Implementation Plan for the design, development and operation of the flight and ground hardware and software, including launch, mission operations, and data processing and distribution; ▪ A set of mission schedules with schedule slack and critical path(s) explicitly shown; and ▪ Coordinate FAME mission definition with the MIDEX Project Office by participating in programmatic and technical meetings; ▪ Refine the E/PO plan; ▪ Phase B final report, consisting of the PDR/CR presentation package, RID responses, and system trades and analysis reports.

Table 6-3. Phase B Deliverables

Deliverable	SRR	PDR
▪ SRR and PDR Briefing Package with supporting Cost Review information	X	X
▪ Mission Requirements Document and System Description, including requirements allocations, subsystem flowdowns, and traceability	Prel.	Final
▪ Top-Level Network Schedule with Detailed Subsystem Network Schedules	Prel.	Final
▪ S/C and Instrument Performance Specifications, including top-level requirements for Flight and Ground S/W	X	
▪ Detailed S/C and P/L Block Diagrams showing all primary I/Fs ▪ Command and Telemetry List (Preliminary)		X
Interface Control Documents (ICD): ▪ Instrument-to-S/C ICD ▪ S/C-to-Launch Vehicle ICD ▪ Internal Subsystem ICDs		X
Preliminary Specialty Engineering Plans: ▪ SEMP, QA Plan; CM Plan; Reliability Assurance Plan; Risk Management Plan; Software Development Plan; Systems Integration Plan; Test Verification Plan; Long Lead Items List; Calibration Plan; and System Safety Plan. Hire System Safety Manager.		X
Systems Level Analyses: ▪ Selecting and Determining Orbit; Link Margins; Loads; Radiation; Dataflows, Memory Storage, and Processor Loading; Thermal; Pointing and Jitter Budgets; and Test Limits/ Margins.		X
Other Analyses: ▪ CCD, SST, and Photometric requirements; and Solar Torque variability		X
▪ S/W End Item Requirements Document for Flight and Ground S/W		X
Engineering Drawings (Preliminary): ▪ S/C and P/L Schematics ▪ Parts and Materials Lists ▪ Mechanical Layout Drawings		X
Support to Launch Vehicle Integration: ▪ Inputs to Missile System Prelaunch Safety Package or ARAR ▪ Hazard Analysis Reports		X
▪ Plans to integrate and verify Mission		X
▪ Flight Operations Plan (Preliminary)		X
▪ Plans to identify and mitigate risk		X
Management Deliverables: ▪ Cost Performance Report from Performance Management System ▪ Schedule Briefing ▪ Technical Briefing		X

D. Mission Definition and Requirements Agreement (MDRA)

This FAME Level 1 Mission Definition and Requirements Agreement contains a compilation of Level 1 requirements extracted from the FAME Concept Study Report (CSR).

D.1 FAME Mission Overview. FAME is a space astrometry mission that offers the unique opportunity to measure the positions, proper motions, parallaxes, and photometry of 40,000,000 stars brighter than m_V=15th magnitude to unprecedented accuracy. The astrometric accuracy will range between 50 and 500 μas, dependent on the magnitude. The instrument will rotate in a scanning survey pattern similar to the *Hipparcos* project. The resulting data will provide a definitive calibration of absolute luminosities of "standard candles" for defining distance scales, calibrate the absolute luminosities of solar neighborhood stars, provide a definitive determination of the frequency of solar-type stars orbited by brown dwarfs and giant planets, provide proper motions and distances for individual stars in star-forming regions, assess the abundance of dark matter in the galactic disk, and become an astrometric and photometric catalog. This mission is a complement to, and source of input data for, NASA's Space Interferometry Mission (SIM).

❒ FAME is placed in a geosynchronous orbit (GEO) with a rotational axis 45° from the Sun, rotating with a 40 minute period. The rotational axis will precess around the Sun every 20 days with precession primarily applied by solar radiation pressure. The mission life is 2.5 years, with a potential extended mission life of an additional 2.5 years. The spacecraft (S/C) is a spin stabilized vehicle fitted with a solar radiation shield to generate the correct precession rate with a prescribed motion, allowing observation in a continuing spiral pattern. The S/C's thrusters reset attitude, spin rate, and perform station keeping maneuvers. The GEO altitude enables the S/C and the ground station to communicate continuously.

❒ FAME's instrument has a compound mirror looking in two directions separated by an angle of 81.5°. The two fields of view are combined on a focal plane with 20 astrometric charge coupled devices (CCD) and four photometric CCDs. The CCD readout rate is maintained at the S/C spin rate providing integration time for the observations. The pixels with stellar images are read out, time tagged, and transmitted to the ground station.

❒ The Ground Data System (GDS) includes a control center, a dedicated 11.3 m antenna, and a Science Data Processing Center. These facilities are linked via dedicated lines, and to NASA's Deep Space Network (DSN) communications system for initial on-orbit operations.

❒ Launch services are provided by NASA under the MedLite program using a Delta 7425 expendable Launch Vehicle (LV).

❒ The Principal Investigator, Dr. Kenneth Johnston of the United States Naval Observatory (USNO), has established partnerships with the Naval Research Laboratory (NRL) to provide the project management, mission engineering, S/C bus development, S/C-to-instrument integration and test, systems performance tests, and initial commissioning operations; and with Lockheed Martin Missiles and Space (LMMS) Advanced Technology Center who will build, integrate, and calibrate the instrument. In addition, NRL will provide a ground station located at Blossom Point, MD. The Smithsonian Astrophysical Observatory (SAO) will provide synthesis and verification of the scientific measurement system.

D.2 FAME Level 1 Requirements. The FAME Mission is considered as a "Level II" mission under the guidelines of NASA GFSC's 311-INST-001 (Rev. A).

D.2.1 Science Requirements. The FAME mission baseline Level 1 science requirements were clearly defined and prioritized in the original proposal and were validated during the concept study. Table D-1 lists these requirements. The primary requirement constitutes the science performance floor and represents the minimum science necessary to ensure the mission is a success. Decisions to descope the science requirements require mutual agreement between the FAME Project partners and NASA's MIDEX Program Office.

D.2.2 Other Level 1 Requirements. Table D-2 lists other Level 1 Requirements related to the S/C, the performance assurance program, and other requirements. Decisions to descope these other Level 1 requirements require mutual agreement between the FAME Project partners and NASA's MIDEX Program Office.

Table D-1. Level 1 Science Requirements

Primary Requirement	FAME will create a catalog of star positions with a measured position, parallax, and proper motion of stars between 5th to 9th visual magnitude to 50 microarcseconds, 50 microarcseconds, and 50 microarcseconds per year respectively, and fainter stars with 500 microarcseconds accuracies. Photometric magnitudes for all stars in the wide band astrometric bandpass as well as the Sloan g', r', c', and z filters. The accuracy of these magnitude will be at the millimagnitude level in the astrometric bandpass and slightly degraded in the Sloan filters.
Science Objectives	Definitive calibration of the absolute luminosities of the "standard candles" (the galactic Cepheid variables and the RR Lyrae stars) that are fundamental in defining the distance scale to nearby galaxies and clusters of galaxies;
	Calibration of the absolute luminosities of solar-neighborhood stars, including Population I and II stars, thus enabling diverse studies of stellar evolution and other interesting science. In the case of Population II subdwarfs, this will allow the determination of the distances and ages of galactic and extragalactic globular clusters with unprecedented accuracy;
	Definitive determination of the frequency of solar-type stars orbited by brown dwarf companions in the mass range 10 to 80 M_{jup} and with orbital periods as long as about twice the duration of the mission. This will include an exploration of the transition region between giant planets and brown dwarfs, which appears to be in the range 10 to 30 M_{jup};
	Proper motions and distances for individual stars in star forming regions for determinations of ages and kinematics; and
	A study of the kinematic properties of the survey of 4 x 10^7 stars within 2.5 kpc of the Sun, and in particular, assess the abundance and distribution of dark matter in the galactic disk with much greater sensitivity and completeness than previously possible.

Table D-2. Other FAME Level 1 Requirements

Spacecraft	▪ Minimum design lifetime of 2.5 years. ▪ Designed to be launched by a MedLite LV into a GEO Transfer (GTO) orbit. ▪ S/C will include the necessary accommodations for the FAME instrument. ▪ S/C will support continuous direct-to-ground downlink of both stored and realtime science and engineering data. ▪ Designed to communicate to ground network using a CCSDS protocol equipped Ground Network. ▪ Conduct a system -level test program to demonstrate that the integrated S/C and instrument can withstand and perform properly when subjected to the expected launch and orbit environments. The system-level test program will include an end-to-end system test, which will simulate orbital performance and verify compatibility of flight and ground segments.
SR&QA	▪ Establish a comprehensive System Safety Program using MIL-STD-882C; and EWRR 127-1. ▪ Establish a Quality Assurance Program, tailored to the project and mission requirements that follows guidelines outlined in NASA's GSFC-41-MIDEX-003, MIDEX Safety, Reliability, and Quality Assurance. ▪ Establish a tailored reliability assurance program, including parts stress analysis, worst-case analysis, and radiation hardness assurance analysis. ▪ Conduct a Failure Mode Effects Analysis (FMEA) for the FAME instrument from the component level (blackbox) interface to the interface with the S/C bus. ▪ Establish a EEE Parts Program requirements for flight parts, tailored to the project and mission requirements. ▪ Establish a Contamination Control Plans to meet the needs of the instrument. Flight Project.
Test and Verification	▪ Establish a test and analysis program to provide assurance that the hardware and software are capable of surviving and performing their mission within specifications. ▪ Demonstrate compliance with the system safety requirements. ▪ Conduct End-to-end tests on the entire FAME system, and include all portions of the operational system, such as all flight hardware, with appropriate stimulation of instruments, operational software and ground systems, including the NASCOM, DSN, FAME internal and external networks, and ground processing facilities. ▪ Conduct mission simulation exercises to validate nominal and contingency mission-operating procedures and to provide for operator familiarization training.
General	▪ Formulate definitive implementation plans, that include performance verification, systems safety, and contamination control Phase C/D/E activities. ▪ Minimize the generation of orbital debris according to the NASA Policy (NMI 1700.8) ▪ The S/C may be designed, constructed, documented, and reviewed in inch-pound units as an exception to the use of the Metric System of Measurement in NASA Programs (NMI 8010.2A).

D.2.3 Level 1 Program Cost Commitments. The FAME Mission will be accomplished within the budgetary requirements contained in Figure D-1. Each program phase is constrained to the values shown in Figure D-1. Adjustments within the overall funding level may be made between development, operations and launch vehicle funding accounts or between years, only if approved by NASA. The LV funding is based on the AO's funding levels, but is phased according to current LV funds. This funding may be adjusted as the MedLite LV costs are refined. Reductions in funding for Educational and Public Outreach will be approved by NASA. Other adjustments may be made within the Project, as required.

D.2.4 Level 1 Schedule Milestones. Table D-4 contains the FAME Mission's Level 1 schedule milestones.

D.3 FAME Mission and Project Requirements.

D.3.1 Proprietary Science Rights. There are no proprietary science rights for the FAME mission. Science data products will be made available to NASA's Astronomical Data Center, to the science community, and to the public, as soon as the data are processed, archived, and validated. These data will be available within one year after the instruments data acquisition is completed to allow sufficient time for the data analysis and verification processes to be completed.

D.3.2 Management Approach. The FAME mission will establish an effective and efficient management approach that will assure that the science requirements can be accomplished within the cost and schedule limitations.

a. Our approach follows the guidelines of *NPG 7120.5a, Program and Project Management Processes and Requirements*, for resource management, information technology, risk and performance management, process metrics, and acquisition management.

b. A Level 1 Baseline schedule will be developed during Phase B. Any changes to the baseline schedule will be approved by NASA. A fully Integrated Management Schedule (IMS) system will be established and implemented during Phase B to manage all project elements. This IMS will include the development of top-level network schedules with critical paths, and detailed supporting subsystem schedules.

c. A Technical Performance Metrics will be established and implemented during Phase B.

d. An integrated Performance Measurement System (PMS) and financial Earned Value Management System (EVMS) will be established and implemented during Phase B.

e. Any changes to the key personnel, including the PI, the Project Manager, the S/C Manager, the Instrument Manager, and the MO&DA Manager, will be approved by NASA.

f. A Senior Executive Board (SEB), comprised of designated senior executives from USNO, NRL, SAO, and LMMS ATC, will be established. The SEB assures that mission institutional activities are aligned and resolves top-level issues that conventional project management mechanisms cannot successfully resolve.

D.3.3 Progress Reporting. A progress reporting activity will be established and periodic reports will be provided to NASA. It will ensure the collection, tracking, reporting, and management of the project according to performance metrics of NASA's EVMS policy. It includes project control and management of all implementation activities to meet performance requirements within cost, schedule, and quality commitments in compliance with baseline project documentation.

D.3.4 Contracting Approach. USNO has delegated responsibility for major contracting actions to the NRL, a Federal Executive Agency.

a. NRL has the requisite experience and capability to solicit, negotiate and administer funds and contracts. All procurement practices and policies are in strict compliance with Federal Acquisition Regulation (FAR) requirements and the NASA FAR Supplement (NFARS).

b. NRL and its subcontractors will comply with any NASA requirements for approval of all contracts, regardless of the procurement organization, prior to issuance to the Contractor.

c. NRL is classified as a Navy Working Capital Fund (NWCA) Agency, which means that all direct project costs, including salaries, are derived from project funds. Overhead burdens (i.e., direct overhead and G&A) are applied only to civil servant salaries, and no burdens are imposed on nonsalary expenses (e.g., materials, travel, subcontracts). A cost pool for discretionary incentive awards for civil servants is contained within this

FIGURE 1
FAME - TOTAL MISSIONCOST FUNDING PROFILE
(ALL COSTS IN REAL YEAR $, TOTALS IN REAL YEAR AND FY 98 $)

ITEM	FY 00	FY 01	FY 02	FY 03	FY 04	FY 05	FY 06	FY 07	FY08	(Real Yr $) TOTAL	(FY 98 $) TOTAL
PHASE B	**17,984,001**	-	-	-	-	-	-	-	-	**17,984,001**	**16,839,374**
NRL	5,061,477	-	-	-	-	-	-	-	-	5,061,477	4,683,392
USNO	634,913	-	-	-	-	-	-	-	-	634,913	587,488
SMITHSONIAN	284,902	-	-	-	-	-	-	-	-	284,902	263,657
LOCKHEED	12,002,709	-	-	-	-	-	-	-	-	12,002,709	11,304,837
PHASE C	**12,858,819**	**15071,174**	-	-	-	-	-	-	-	**27,929,993**	**25,583,918**
NRL	4,385,655	9300,796	-	-	-	-	-	-	-	13,686,451	12,340,858
USNO	260,869	657,659	-	-	-	-	-	-	-	918,528	827,113
SMITHSONIAN	191,598	398,147	-	-	-	-	-	-	-	589,745	531,943
LOCKHEED	8,020,697	4714,572	-	-	-	-	-	-	-	12,735,269	11,884,004
PHASE D	-	**40537,965**	**39,596,998**	**25,075,678**	-	-	-	-	-	**105,210,641**	**90,981,063**
NRL	-	14776,602	12,583,250	9,364,747	-	-	-	-	-	36,724,599	31,674,854
USNO	-	790,817	1,521,344	1,431,610	-	-	-	-	-	3,743,771	3,189,762
SMITHSONIAN	-	255,974	531,925	414,508	-	-	-	-	-	1,202,407	1,025,95
LOCKHEED	-	4714,572	5,960,479	864,813	-	-	-	-	-	11,539,864	10,259,958
KSC	-	20000,000	19,000,000	13,000,000	-	-	-	-	-	52,000,000	44,830,538
PHASE E	-	-	-	**1,903,243**	**3,559,888**	**3,027,301**	**814,452**	-	-	**9,304,884**	**7,330,319**
NRL	-	-	-	1,161,809	905,565	775,265	201,442	-	-	3,044,081	2,418,650
USNO	-	-	-	518,560	2,073,287	1,651,616	434,877	-	-	4,678,340	3,656,677
SMITHSONIAN	-	-	-	108,330	450,239	467,802	121,511	-	-	1,147,882	893,796
LOCKHEED	-	-	-	114,544	130,797	132,618	56,822	-	-	434,581	361,196
POST MISSION	-	-	-	-	-	-	**430,189**	**317,750**	**34,222**	**782,161**	**564,821**
NRL	-	-	-	-	-	-	48,841	67,652	34,222	150,515	107,009
USNO	-	-	-	-	-	-	381,548	250,098	-	631,646	457,812
SMITHSONIAN	-	-	-	-	-	-	-	-	-	-	-
LOCKHEED	-	-	-	-	-	-	-	-	-	-	-
TOTAL NASA MISSION COST	**30,842,820**	**55,609,139**	**39,596,998**	**26,978,921**	**3,559,888**	**3,027,301**	**1,244,641**	**317,750**	**34,222**	**161,211,680**	**141,299,495**

(FY Costs (including fee) in Real Year Dollars, Total in Real Year, and FY1998 Dollars)

Figure D-1. Total Mission Cost Funding Profile, Time-Phased by Fiscal Year (CSR Guidelines, Figure 1)

Table D-3. Constrained Phase Budgets

Program Phase or Activity	FY98 $Mil
▪ Concept Study (Phase A)	0.35
▪ Technical Definition (Phase B)	16.84
▪ Design and Development (Phase C/D) - Budget for the S/C, instruments, and ground systems, exclusive of launch services.	71.31
▪ MedLite LV Launch Services	43.12
▪ MO&DA (Phase E)	7.90
Total	$139.94

Table D-4. Schedule Milestones

Event or Activity	Date	Duration
▪ Phase B (ends in PDR)	Oct 99 - June 00	9 mo
▪ Phase C (ends in CDR)	July 00 - March 01	9 mo
▪ Phase D (development)	April 01 - June 03	27 mo
▪ Preship Readiness Review	April 03	N/A
▪ Deliver S/C to Launch Site	May 03	
▪ Flight Readiness Review	July 03	
▪ Launch	21 July03	
▪ Phase E	July 03 - Jan 07	42 mo
▪ Extended Mission	Jan 06 - July 09	42 mo

burden. Direct costs associated with the issuance of major contracts are included as a procurement surcharges to those subcontracts.

D.3.5 Contract Performance Incentives. Our approach to performance incentives is based on meeting cost commitments and technical performance. Awards are provided to those organizations providing end item hardware/software deliverables during Phases C/D/E. No performance incentives are baselined for Phase B contracts, and any contracting actions for Phase B will be on a Firm Fixed Price (FFP) or Cost Plus Fixed Fee (CPFF) basis. Performance incentives will be applied to those hardware/software deliverables with a contract value of greater than $2.5 Mil. Component deliverables of less than this value will be on a FFP basis to minimize administrative contracting overhead. We will use a mix of existing Time and Material (T&M) and CPFF contracts for industry support labor and specialty engineering tasks within the USNO and NRL. No incentives are applied to these support contracts.

D.3.6 LMMS Contract Incentives. (USNO and NRL performed a competitive selection for the FAME Instrument using a Broad Agency Announcement (BAA) issued by NRL under FAR paragraphs 35.016 and 6.102(d)(2). NRL will place a major contract with LMMS ATC after ATP under the aegis of that BAA for Phase B/C/D/E activities. The contract will contain incentives requiring strict adherence to both (i) cost commitments; and (ii) technical performance for the FAME Instrument. The contract will be structured under a Cost Plus Incentive Fee/Performance Award Fee (CPIF/PAF) structure with the following guidelines,

a. *Total Fee Pool:* The total fee pool (up to 12%) is divided between the cost pool (4.0%) and the performance pools (8.0%).

b. *Final Fee Determination:* The final value of the earned fee is determined by the PI after the 2 1/2 year mission is complete and the resultant Instrument science data are made available for analysis. If the FAME science investigation's requirements are not met as a result of on-orbit instrument failure, and if the findings of an independent NASA-convened Failure Review Board (FRB) determine the failure is solely the Contractor's responsibility, then the maximum aggregate cost and performance fees will not exceed 1/2 of the value of the Total Fee Pool.

❒ *Fee Payme*nt: Fee is paid incrementally during contract performance at 90% of that earned on a provisional basis. Provisional payments recognize the requirements for Final Fee Determination by the PI and/or the FRB findings. The CSR's Appendix H provides in-depth details of the Incentive Fee Plan.

D.3.7 Policy Compliance. Contracts, technology exchanges, and agreements will comply with all laws and regulations regarding the transfer of sensitive and proprietary information. The project will abide by all necessary Federal (including NASA), state, and local laws and regulations, including the National Environmental Policy Act (NEPA).

D.3.8 Safety, Reliability, and Quality Assurance. NRL will address the process for achieving safety and mission success, including system safety, reliability engineering, electronic and mechanical parts reliability, quality assurance for both hardware and software, surveillance of the development processes, "closed loop" problem failure reporting and resolution and environmental design and test requirements.

❒ The process will accomplish the following:

a. Provide for assessment and documentation of hazards, with risks identified, analyzed, planned, tracked, and controlled.

b. Provide for a safety assessment and certification regarding readiness for flight or operations, explicitly noting any exceptions arising from safety issues and concerns.

c. Use a quality management system following ISO 9000 guidelines with the appropriate surveillance and quality audits.

❒ Mission success criteria will be defined to aid in early assessment of the impact of risk management trade-off decisions.

D.3.9 Project-Specific Facilities. There are no major project-specific facilities required for this mission. To meet science goals for continuous downlink, an upgrade to NRL's existing Blossom Point, MD facility is required. This upgrade adds a dedicated 11.3 m antenna, a redundant transmitter, and related cabling.

D.4 Mission Responsibilities. FAME's management team contains the scientific, technological, and managerial expertise to execute this mission on cost and schedule.

D.4.1 US Naval Observatory. The PI, Dr. Johnston, the United States Naval Observatory's Scientific Director, is responsible to NASA/GSFC for the leadership and successful performance of the FAME mission, including on-time and on-budget delivery of the instrument, S/C, ground data analysis system, and archival data products.

He is responsible for assuring that the Level 1 science baseline defined in Table D-1 is met and will establish programmatic constraints and criteria for evaluating trade-offs. He guides the mission's scientific aspects; organizes the scientific investigation, including prompt reduction and dissemination of data to the scientific community. He is responsible to achieve and to recommend termination if these objectives cannot be met within cost and schedule reserves.

He will establish a Science Team (ST), and will refine the Science Requirements and the Science Implementation Plan. The PI, with the ST, is responsible for developing the archival and analysis methods, and for interpretation and distribution of the data resulting from the mission. The ST is chaired by Dr. Seidelmann, with Dr. Reasenberg as deputy, both of whom report directly to the PI.

He will work with the PM to evaluate trades and maintain consistency with the cost-capped nature of the project in achieving the baseline science mission and to achieve as much margin above the "Performance Floor Mission" as possible, if descoping is required.

The USNO will develop, test, and integrate the algorithms necessary for μas precision astrometry and sub-millimagnitude photometry. This will include testing by simulations to determine the most robust methods with which to analyze the data. In addition to USNO's responsibilities of data reduction, analysis, archiving, and dissemination, USNO will run the SOC and provide science investigation coordination of the Science Team.

The PI is responsible for assuring that progress is reported to the appropriate NASA offices.

D.4.2 Naval Research Laboratory. NRL is the parent organization of the Project Manager. Under direction of the PI, the PM will develop, integrate, and test the S/C, perform the S/C to P/L integration, support launch processing, and provide a ground station. NRL PM, Mr. Mark Johnson, is responsible to the PI for developing mission elements to a consistent set of requirements, supporting the Level 1 science baseline defined in Table D-1, and assuring the budget and schedule are met. The PM is responsible for the S/C bus and instrument delivery, integration and test, support to the launch vehicle, and initial on-orbit evaluations and instrument commissioning. A System Engineering and Integration Team (SEIT) provides the PM with specific systems engineering capabilities needed to carry out the science mission.

D.4.3 Lockheed Martin Missiles and Space Advanced Technology Center. LMMS ATC, FAME's industrial partner, will specify, develop, manufacture, integrate, and calibrate the FAME instrument. Their technical capabilities and facilities support the development of a world-class instrumentation to ensure mission success.

D.4.4 Smithsonian Astrophysical Observatory.

SAO is the parent organization of the Project Scientist, Dr. Robert Reasenberg. SAO will provide synthesis and verification of the scientific measurement system.

D.5 NASA Responsibilities. The MedLite launch vehicle will be provided by the NASA Launch Vehicle Office.

❒ NASA's launch services contract provides for vehicle production, standard launch site assembly, checkout, launch countdown, and range support, as well as S/C/vehicle integration, analysis, and postflight mission data evaluation.

❒ The GSFC Orbit Launch Services (OLS) Project provides technical oversight of the launch vehicle and coordinates mission integration through an OLS-Mission Integration Manager.

❒ The MIDEX Program Manager will provide coordination support for the development of a Project Service Level Agreement (PSLA) and Detailed Mission Requirements (DMR) with the Office of Space Communications for use of Deep Space Network (DSN) communication services.

D.6 Reporting and Independent Reviews. Reporting requirements and independent reviews will be kept to a minimum, consistent with ensuring that NASA maintains an effective understanding of the progress of the development and execution of the mission. To this end, reports and supporting materials will be based on internal Project products and processes to the maximum extent practical. The details will be developed during Phase B between the PI, the Project Manager, and the MIDEX Program Manager.

G. Statement of Work (SOW)

This appendix contains the sample Statement of Work (SOW) between the National Aeronautics and Space Administration (NASA) and the U.S. Naval Observatory (USNO) for conduct of the Full-sky Astrometric Mapping Explorer (FAME) as a MIDEX project as described in AO 98-OSS-03. Lockheed Martin Missiles and Space (LMMS) Advanced Technologies Corporation, Smithsonian Astrophysical Observatory (SAO), and Naval Research Laboratory (NRL) are partners on this project, and their efforts, which will be contracted from USNO, are included in the SOW.

G.1 Phase B—Preliminary Design. During Phase B, the USNO will lead the FAME preliminary design effort.

a. Internal and external interfaces will be established and documented. The design will be developed with LMMS Advanced Technology Center and NRL to ensure the instrument and spacecraft fulfill mission requirements and are compatible with the launch vehicle.

b. Ground Support Equipment (GSE) and software preliminary designs will be developed to assess design adequacy.

c. The design, including software requirements and architecture, will be fully documented.

d. Evaluate alternatives and obtain permission for specific orbit slots.

e. Develop data reduction analysis and archiving system. Initiate algorithm development.

f. The deliverables include documentation necessary for the Mission Design Review and System Description. This includes block diagrams, engineering drawings, flight operation plans, requirements, and architectural design documents. Long-lead items required for the FAME mission will be identified and procurement will begin as necessary.

G.2 Phase C—Design Phase. During Phase C, USNO will develop the FAME instrument and spacecraft detailed designs to the level permitting fabrication of all subsystems.

a. Long-lead items will be ordered and fabrication will begin immediately upon approval of the detailed designs. Coordination with participating institutions continues—particular attention will be given to early definition of mechanical, electrical, and software interfaces among subsystems provided by different institutions.

b. The spacecraft and instrument integration plan will be developed.

c. The system engineering analysis will be updated.

d. The flight and GSE software design will be completed, software will be developed, and a final command list and telemetry definition will be released.

e. Data archiving reduction and analysis system development continues.

f. Deliverables include documentation for the critical design review and system integration plan, including hardware and software detailed design documents.

G.3 Phase D—Development Phase. During Phase D, the USNO will lead the FAME development, complete fabrication, integration, and test efforts.

a. Subsystems will be assembled and tested before integration. Subsystems will be integrated into a complete system and tested.

b. Integration and test activities will occur in a cleanroom environment.

c. Flight and ground software coding will be completed and software will be tested with the instrument and GSE.

d. Acceptance testing will be performed in accordance with the verification plan.

e. The spacecraft and instrument will be tested and accepted before integration begins. Integration will be completed and acceptance tests performed.

f. The spacecraft will be delivered for integration on the launch vehicle.

g. NRL will develop the ground station, workstations, and software needed to control the FAME mission launch. These systems will be tested by conducting simulated operations and compatibility tests with the spacecraft before launch.

h. USNO will support the launch and initial 30 day on-orbit commissioning of FAME.

i. The hardware will be acquired for data reduction, analysis, and archiving.

j. Deliverables include detailed drawings, test procedures, flight instrument and spacecraft, flight and ground software, GSE, and readiness review data packages.

G.4 Phase E—Mission Operations and Data Analysis (MO&DA). During Phase E, FAME project personnel will provide mission operations activities and USNO will lead the FAME data analysis, archiving, and dissemination.

a. The spacecraft and instrument will be checked out for nominal operation. Rotation and precession rates of the spacecraft will be adjusted.

b. The observation program will begin along with verification of data reduction procedures.

c. Spacecraft status and operation documentation will be provided.

d. Software tools necessary for data analysis and reduction will be refined and associated documentation updated.

e. Data will be archived in the various phases of reduction.

f. The catalog of all positions, proper motions, and parallaxes will be made available one year after the baseline mission is complete. Assuming there will be an extended mission, improvements to the catalog will be released as appropriate, and a final catalog of positions, proper motions, and parallaxes will be released one year after the completion of the mission.

g. As available and required for the SIM mission, data supporting the selection of grid and target stars will be made available to the SIM project office.

h. The FAME science team will be supported for their scientific investigations.

i. The results of scientific investigations of the FAME data will be published in the referreed astronomical literature.

I. Relevant Experience and Past Performance

I.1 United States Naval Observatory. The United States Naval Observatory is a world recognized leader in precision astrometry who consistently compiles large, accurate position and proper motion surveys and parallax catalogs. Recent projects using CCDs and the large data sets they generate have direct relevance to the FAME project. The following demonstrate the experience of USNO personnel.

❒ *Sloan Digital Sky Survey (SDSS):* USNO is a partner in the SDSS. USNO personnel did the CCD array engineering and are responsible for the astrometric pipeline, which uses the images from the 54 CCDs and converts them to astrometric positions. Consistently, the phases of the astrometric pipeline have been completed at cost and on-schedule.

▫ *Point of Contact:* Jeffrey Pier, US Naval Observatory, PO Box 1149, Flagstaff, AZ 86002-1149, (520) 779-5132.

❒ *Tycho-2 and ACT Reference Catalog:* The Tycho-2 project is a multi-institutional project to catalog the positions and motions of 2.5 million stars observed with the Tycho experiment aboard the *Hipparcos* satellite. USNO personnel were solely responsible for the derivation of the proper motions of the Tycho stars. This was completed at cost and on-schedule. The ACT Reference Catalog, which combined ground-based observations with the Tycho-1 data, quickly became the international standard reference catalog for those needing higher densities than contained in Hipparcos. This project was completed at cost and on schedule.

▫ *Point of Contact:* Sean Urban, 3450 Massachusetts Ave. NW, Washington, D.C. 20392-5420, (202) 762-1445.

❒ *Precision Measuring Machine:* USNO has utilized CCDs in its Precision Measuring Machine (PMM) for the last 4.5 years. Over 12 Terapixels of data have been processed. One product of this machine, the USNO-A catalog of 500M stars, has gone through 2 versions and is still 25 times larger than any other astronomical catalog available to the public. The SA version of 50M stars was specially prepared to provide reference stars for ground-based CCD observations. The PMM projects have consistently been completed at cost and on-schedule.

▫ *Point of Contact:* David Monet, US Naval Observatory, PO Box 1149, Flagstaff, AZ 86002-1149, (520) 779-5132.

❒ *USNO CCD Astrograph Catalog:* A ground-based astrometric survey is underway using a 4k x 4k CCD on an optical telescope. This project, known as the USNO CCD Astrograph Catalog (UCAC), is in its second year of operation and has already generated over 1 Tbyte of data. Positional accuracies of 20 mas will be achieved, making this one of the most precise ground-based optical projects. This project is at cost and on-schedule.

▫ *Point of Contact:* Theodore Rafferty, 3450 Massachusetts Ave. NW, Washington, D.C. 20392-5420, (202) 762-1471.

❒ *USNO Parallax Project:* For the last three decades, USNO personnel have observed and analyzed parallax measurements for nearby stars. Over 1000 of the highest precision parallaxes have resulted from this work. Currently, 2k x 2k CCDs are being used to observe nearby degenerate stars.

▫ *Point of Contact:* Conard Dahn, US Naval Observatory, PO Box 1149, Flagstaff, AZ 86002-1149, (520) 779-5132.

❒ *2 Micron All Sky Survey (2MASS):* USNO personnel are on the 2MASS science team. USNO has been providing astrometric expertise to IPAC for the development of the astrometric software pipeline for 2MASS data.

▫ *Point of Contact:* David Monet, US Naval Observatory, PO Box 1149, Flagstaff, AZ 86002-1149, (520) 779-5132.

❒ *Hubble Space Telescope WF/PC IDT:* USNO was the first institution to make astrometric observations using CCDs, and now has over 20 years of experience in the field. As early as 1977, USNO personnel were involved in the Investigation Definition Team for the WF/PC on the Hubble Space Telescope. Throughout the years, many observing runs have been made with that instrument by USNO staff.

▫ *Point of Contact:* P. Kenneth Seidelmann, 3450 Massachusetts Ave. NW, Washington, D.C. 20392-5420, (202) 762-1441.

I.2 Lockheed Martin Missiles and Space (LMMS). Lockheed Martin's Advanced Technology Center (ATC) is one of the premier scientific research laboratories and instrument developers in the country, leading and supporting principal in-

vestigators or co-investigators on astronomical and Earth science space missions. Our performance on science missions such as SXT, GOES SXI, MDI, TRACE, GP-B, and SIM demonstrates our capability to design, develop, integrate, and validate scientific instruments which meet mission objectives. The following program summaries reveal the direct relevance of this experience in reducing cost and schedule risk for development of the FAME instrument.

❒ *Soft X-Ray Telescope (SXT)*, Contract NAS8-37334, November 1986 through August 1991, MO&DA through 2001. LMMS ATC is the scientific principal investigator and prime development contractor of the SXT instrument. SXT is a 25-cm-aperture, 1.54-m-focal-length grazing incidence mirror x-ray telescope used to observe the solar corona in near-realtime and 3-arcsec spatial resolution. SXT was launched aboard the Japanese Yohkoh spacecraft in August 1991. The instrument has a 2-year design lifetime, but is expected to function until the decay of the satellite in the year 2001, eight years beyond mission requirements. Already, SXT has produced more than 3 million images of the Sun and continues to perform as specified.

▫ *Relevance to FAME:* SXT demonstrates LMMS ATC capability to design, analyze, and fabricate innovative optical systems on time and to overcome difficult technical problems. It also demonstrated our ability to effectively work on collaborative scientific instrument programs, and work with vendors to design and manufacture state-of-the-art components.

▫ *Cost and Schedule Performance:* A program cost variance of approximately 2% was achieved on total contract value of $32.3M. All major contract milestones, including delivery of the SXT payload, were achieved on time in a 4.5-year schedule. The SXT team was highly effective in not allowing technical problems to interfere with schedule by adjusting fabrication and test phases.

▫ *Points of Contact:* Contract Administrator: Marlyce Alexander, Phone: (205) 544-8344, Fax: (205) 544-9354; Technical Contact: John Owens, Phone: (205) 544-1969, Fax: (205) 544-9258, NASA/MSFC Marshall Space Flight Center, AL 35812.

❒ *GOES Solar X-Ray Imager (SXI) Program*, Contract NAS5-97181, June 1997 through 2015 (anticipated). The LMMS ATC is developing two SXI instruments for flights on the National Oceanic and Atmospheric Administration's (NOAA) Geo-stationary Operational Environmental Satellites (GOES) N and O. The SXI development is being managed by the NASA Goddard Space Flight Center. The SXI will image the full Sun at wavelengths between approximately 6 and 60 Å with a detector having 5-arcsec pixels. The launch of the first SXI will be on GOES N in the second quarter of 2001 and the second SXI is to be launched about two years later on GOES O. There are options for two more SXIs to fly on GOES P and Q.

▫ *Relevance to FAME:* GOES SXI achieved a successful preliminary design review as well as good working relationships with major subcontractors. It is an excellent example of instrument development program management capabilities, praised by ISO 9001 auditors and nominated for the LM NOVA Award.

▫ *Cost and Schedule Performance:* The SXI program is currently running under budget and approximately one month behind schedule. This schedule gap is closing and the engineering and flight instrument deliveries are expected to take place on time. The program has maintained a green review status since its inception, based on a reception of good executive reviews, the average award fee is 90%.

▫ *Points of Contact:* Technical POC: Jaya Bajpayee, Phone: (301) 286-0569, NASA Goddard Space Flight Center.

❒ *Michelson Doppler Imager (MDI),* Contract PR-6209, November 1988 through December 1995, MO&DA through 2000. The NASA-funded Michelson Doppler Imager (MDI) was built by LMMS ATC under subcontract from Stanford University. This scientific PI instrument is a wide-field, tunable optical interferometer that measures oscillations on the Sun's surface. LMMS ATC, working with Stanford, was responsible for instrument concept, design, fabrication, test, integration, and prelaunch support. MDI was launched onboard the ESA Solar and Heliospheric Observatory (SoHO) satellite 2 Dec 1995, and reached final positioning at the L1 Lagrangian point on 14 Feb-

ruary. Several million solar magnetograms collected to date show the instrument is performing as expected. In fact, the instrument has performed for twice the specified design life, has taken 30 million images of the Sun, and has a life expectancy of at least seven additional years. During a spacecraft emergency, MDI survived excessively low temperatures beyond design specifications for three months and continues to perform normally.

▫ *Relevance to FAME:* MDI demonstrated successful design and development of an optical telescope instrument for scientific mission. Extensive early modeling and prototyping were used to validate mission and instrument concepts. MDI also demonstrated our successful support for a Principal Investigator Team on a GSFC project.

▫ *Cost and Schedule Performance:* Final contract value of $40M included an 8% variance due to difficulties in CCD electronics and additional integration, test, and prelaunch activities. All instrument deliveries were on schedule and supported a December 1995 launch.

▫ *Points of Contact:* Contract Administrator: Paul Chock, Phone: (415) 723-2812, Fax: (415) 723-7444; Technical Contact: Rock Bush, Phone: (415) 723-8162, Fax: (415) 723-2333, Stanford University, 855 Serra Street, Stanford, CA 94305-6114.

❒ *Transition Region and Coronal Explorer (TRACE)*, Contract NAS5-38099, December 1993 through April 2000. TRACE is a single-instrument solar mission that uses UV and normal incidence EUV channels to collect digital images. TRACE enables solar physicists to study the connections between fine-scale surface magnetic fields and the associated plasma structures on the Sun with a spatial resolution of 1 arcsec. The data that are being collected are stunning, offering insights into space physics not previously available, thus enabling a new understanding of challenging solar and stellar problems. TRACE is a SMEX mission where LMMS ATC is the principal investigator institution. LMMS ATC worked as part of the GSFC SMEX team in a mutually beneficial arrangement. TRACE surpassed its design life of eight months with no degradation, and the contract is extended for at least one additional year of observation.

▫ *Relevance to FAME:* TRACE demonstrates LMMS ATC's successful accomplishment of an Explorer mission with GSFC. The instrument demonstrated successful image stabilization system.

▫ *Cost and Schedule Performance:* Final program value of $31M included a $9M underrun on overall program returned to NASA. Payload was delivered one month ahead of original schedule.

▫ *Points of Contact:* Contract Negotiator, C. Cavey, Phone: (301) 286-3721, Technical Contact: H. Maldonado, Phone: (301) 286-6762, NASA/GSFC Goddard Space flight Center, Greenbelt, MD 20771.

❒ *Gravity Probe-B (GP-B) Relativity Mission*, Contract PR8709, March 1985 to Present. The GP-B mission seeks to verify Einstein's Theory of Relativity by utilizing cryogenically cooled gyroscopes to provide a nearly perfect space-time reference system. Instrument stability and freedom from outside forces are key requirements, hence the cryogenic probe and dewar are two of the critical components for ensuring mission success. LMMS ATC was Stanford University's industrial partner for the GP-B payload. As a member of the GP-B integrated product team (IPT), LMMS ATC is task manager for the SFHe cryogenic dewar, the vacuum instrument, probe, and payload electronics. LMMS ATC is fully responsible for schedule, budget, and technical performance. In addition, LMMS ATC supports Stanford for the design, fabrication, test, and integration of the cold pointing telescope, payload system engineering, and integrated payload testing. The probe and dewar have been delivered and are currently being integrated with the payload.

▫ *Relevance to FAME:* Demonstrated experience in instrument development, integration, and test. Required detailed thermal analysis and control. FAME Instrument Program Manager, Richard Vassar, was Program Manager for GP-B payload, successfully leading development, fabrication, and delivery.

▫ *Cost and Schedule Performance:* $151M program with 5% variance due to requirements change and assembly difficulties. Dewar delivered according to original schedule; probe delivered 17 months late due to requirements change.

▫ *Points of Contact:* Contract Negotiator: Tom Langenstein, Phone: (650) 725-4108, Technical Contact: Francis Everett, Phone: (650) 725-4100,

Stanford University, W. W. Hansen Experimental Physics Laboratories, Stanford, CA 94305-4085

❒ *Space Interferometry Mission (SIM),* Contract 1000016, September 1998 through June 2001 (Formulation Phase). During the Formulation Phase, LM is SIM Instrument Industry Partner, co-leading instrument system engineering team activities, participating in project level-system engineering team activities, supporting instrument team preliminary design, verification, operations, and calibration planning, and participating in nanometer and picometer technology programs. LM is also leading major testbeds for thermal opto-mechanical (TOM), and full aperture metrology (FAM) and eventual transition of STB-3, and brassboards.

▫ *Relevance to FAME:* SIM TOM testbed will be used to validate FAME thermal analysis capability that includes thermal-opto-mechanical control, full aperture metrology feasibility, and pathlength and pointing control. TOM is demonstrating capability to control a precision optical structure to within 10 mK, six times more precise than FAME requirement.

▫ *Cost and Schedule Performance:* Within budget and on schedule.

▫ *Points of Contact:* Contract Administrator: Ben Parvin, Phone: (818) 354-1780, Fax: (818) 393-5239; Technical Contact: Jim Marr, Phone: (818) 393-1528, Fax: (818) 393-5239, Jet Propulsion Laboratory, 4800 Oak Drive, Mail Stop: 301-486, Pasadena, CA 91109-8099.

❒ *High Resolution Dynamics Limb Sounder (HIRDLS)*, Contract S9440025, November 1994 through March 2003. LMMS ATC is the instrument integrator of the NCAR HIRDLS infrared upper atmosphere limb-scanning radiometer. LMMS ATC is also developer of the HIRDLS Telescope Subsystem (TSS). The Phase B definition studies for both contracts were successfully completed, and the program moved into a 5-year Phase C/D in February 1997. HIRDLS is a primary instrument on the NASA EOS Chemistry Satellite scheduled for launch in 2002. LMMS ATC is meeting all requirements to specify, analyze, develop, fabricate, assemble, and test a telescope subsystem, a detector subsystem, an instrument processor subsystem, and power subsystem; to integrate these and other subsystems into the instrument; and to test and deliver the integrated HIRDLS instrument. The most challenging requirements in instrument design are providing less than 1% absolute radiometric knowledge accuracy and LOS pointing knowledge of better than 0.34-arcsec.

▫ *Relevance to FAME:* Demonstrating complex structural, thermal, and optical analysis similar to FAME requirements; developing thermally compensating optical system and very precise optical alignment.

▫ *Cost and Schedule Performance:* On $14.2M Phase B, telescope subsystem and instrument integration efforts were completed within budget and on schedule. Phase C/D is currently over budget by 3% due to subcontractor issues.

▫ *Points of Contact:* Contract Administrator: David Wilson, Phone: (303) 497-8075, Fax: (303) 497-8080, Technical Contact: Joanne Loh, Phone: (303) 497-8067, Fax: (303) 497-8080, University Corporation for Atmospheric Research, National Center for Atmospheric Research (NCAR) HIRDLS Program Office, 3300 Mitchell Lane, Suite 250, Boulder, CO 80307.

❒ *UARS Cryogenic Limb Array Etalon Spectrometer (CLAES)*, Contract NAS5-27752, October 1983 through December 1998. LMMS ATC was the scientific principal investigator and prime development contractor for the 20-channel IR (3.5-13 mm) all-cryogenically cooled Earth limb scanning solid Fabry-Perot interferometer. It was the primary IR emission instrument on NASA's Upper Atmospheric Research Satellite (UARS) launched in September 1991. CLAES derived geophysical quantities from the measurement of Earth limb spectral radiance emissions, allowing it to operate throughout the diurnal cycle, including polar night. It operated for its stored-cryogen design lifetime of 19 months. CLAES obtained the first global maps of a series of critical stratospheric ozone-layer gases, including CFCs, various chlorine and nitrogen compounds, and polar stratospheric clouds.

As instrument prime contractor, LMMS ATC defined the instrument requirements and concept, designed, fabricated, and integrated the telescope, spectrometer, and cryostat subsystems; tested and flight quantified the complete assembly; interfaced the complex instrument to the UARS spacecraft;

developed retrieval algorithms and production processing software; validated scientific data products and delivered them to data archive; and conducted scientific data analysis.

▫ *Relevance to FAME:* Demonstrated design development integration, and test of instrument in support of LMMS ATC Principal Investigator and GSFC mission objectives.

▫ *Cost and Schedule Performance:* Final program value of $59M included a 14% overrun due to unanticipated complexity of ensuring integrity of electrical/mechanical drive components during thermal cycling and calibration/testing. Instrument and data delivered on schedule which included delay in UARS launch due to the 1986 Challenger accident.

▫ *Points of Contact:* Contract Negotiator: Robert Krenning, Phone: (301) 286-1774, Fax: (301) 286-1774, Technical Contact: Anne Douglass, Phone: (301) 286-2337, fax: (301) 286-1754, NASA/GSFC Greenbelt, MD 20771.

❒ *Polar Ionospheric X-ray Imaging Experiment (PIXIE)*, Contract NAS5-30372, March 1989 through December 1998. PIXIE is a multi-pinhole camera which images the Earth's aurora in x-rays. The x-rays measured by PIXIE are generated when energetic electrons strike the upper atmosphere. By imaging these x-rays and measuring their energies across a broad energy range, PIXIE determines the fluxes and characteristic energies of the parent electrons. PIXIE is currently producing the first global images of the x-ray aurora from the NASA POLAR spacecraft. POLAR is part of the NASA ISTP/GGS mission. LMMS ATC is the principal investigator institution.

▫ *Relevance to FAME:* Demonstrated design development, integration, and test of instrument in support of LMMS ATC Principal Investigator and GSFC mission objectives.

▫ *Cost and Schedule Performance:* Final program value of $12.8M included extended development phase and increased MO&DA award. Instrument delivered according to schedule revised for launch delays.

▫ *Points of Contact:* Contract Officer: Loren Kruger, Code 216, Phone: (301) 286-2028, Technical Contact: Dr. Robert A. Hoffman, Code 696, Phone: (301) 286-7386, NASA Goddard Space Flight Center, Greenbelt, MD 20771.

❒ *PEM AXIS/HEPS for UARS,* Contract SWRI 17167/83781, October 1983 through December 1998. The PEM accurately profiles atmospheric energy deposition rates from electrons and ions. It measures particle fluxes as a function of pitch angle as well as energy. HEPS was designed to provide simultaneous pitch angle measurements with high flux sensitivity (large geometric factor) and fine energy resolution. These measurements are achieved over broad energy and pitch angle ranges. AXIS was designed to remotely sense the precipitating electron population with high time, energy, and spatial resolution. AXIS allows global rate of energy deposition to be calculated. These instruments began operation on board the NASA UARS in October 1991, and continue to operate without significant degradation.

▫ *Relevance to FAME:* Demonstrated development of integrated instrument with detectors and electronics. Implemented simple data interface between instrument and spacecraft.

▫ *Cost and Schedule Performance:* $24.9M program was completed with 16% variance due to technical problem with parts quality and performance of passive cooling for AXIS. Launch delayed due to Challenger accident; instruments delivered in accordance with revised schedule.

▫ *Points of Contact:* Contract Negotiator: Michelle Chippie, Phone: (210) 522-5527, Technical Contact: Dr. D. Winningham, Phone: (210) 522-3075, Southwest Research Institute, P.O. Box 2851, 6620 Culebra Rd., San Antonio, TX 78228.

I.3 Naval Research Laboratory (NRL). NRL's Naval Center for Space Technology (NCST) is one of the world's foremost designers, builders, and operators of high-performance, high-reliability spacecraft. NCST's Spacecraft Engineering Department has built and launched over 87 satellites since 1960. Relevant programs from the last 10 years include:

❒ *Low-Power Atmospheric Compensation Experiment (LACE):* The Strategic Defense Initiative Organization (SDIO, later renamed the Ballistic Missile Defense Organization, or BMDO) asked NRL's NCST to build a simple, spaceborne target with a single sensor to characterize a laser beam emitted from a ground-based laser site. As the program evolved LACE became a full satellite instead of a set of sensors on a host satellite, and SDIO

added an instrument to take video images of the UV emission from rocket plumes.

The SED designed and built the LACE satellite's electrical power subsystem, telemetry and tracking subsystem, radio frequency subsystem, attitude control subsystem, and mechanism subsystem; integrated and tested the spacecraft; and calibrated the Sensor Array Subsystem. SED also designed and built two transportable ground stations to allow the LACE experimenters to review the data and assess the progress of the experiments in real time. LACE was built, integrated, and tested at NCST's Payload Processing Facility in Building A-59.

LACE included three separate sensor arrays with a total of 210 sensors capable of characterizing ground-based laser beams with continuous wave or pulsed emission in the visible, ultraviolet, and infrared bands and the Ultraviolet Plume Instrument (UVPI).

▫ *Point of Contact*: Mr. Paul Regeon, Naval Research Laboratory, 4555 Overlook Avenue, S.W., Washington, D.C. 20375-5230, (202) 767-6637.

❒ *Clementine Advanced Technology Demonstration:* BMDO selected the NRL's NCST to design, engineer, manufacture, test, and integrate the *Clementine* spacecraft. NCST was also responsible for mission design, ground support, and flight operations.

The SED designed and built the advanced composite structures, interstage adapter system, attitude control system, and reaction control system; integrated and tested the sensors, experiments, and spacecraft; integrated the spacecraft with the launch vehicle; and conducted mission operations. *Clementine* was built, integrated, and tested at NRL's Payload Processing Facility in Building A-59.

Clementine incorporated advanced, light weight, non-spaceflight, and non-heritage technologies as major and critical components of the payload, the spacecraft hardware, and the spacecraft software subsystems.

NCST designed, built, tested, and integrated *Clementine* in less than 24 months. *Clementine* launched on board a Titan IIG in January 1994 from Vandenberg Air Force Base in California.

Clementine qualified 23 advanced lightweight technologies for spaceflight use and mapped the lunar surface in 11 spectral bands with greater than 99% coverage.

▫ *Point of Contact:* Mr. Paul Regeon, Naval Research Laboratory, 4555 Overlook Avenue, S.W., Washington, D.C. 20375-5230, (202) 767-6637.

❒ *Interim Control Module (ICM):* The ICM will provide reboost and attitude control for the ISS from assembly phase 2A to assembly phase 7A, and possibly 8A. The ICM is deployed from the Space Shuttle and mated with the International Space Station (ISS) at the Russian Node (called the FGB). The SED is designing, building, and testing the ICM for NASA, and will deliver the ICM to Cape Canaveral in October 1999 for launch on board the Space Shuttle in March 2000. The ICM is being built and tested at NRL's Payload Processing Facility in Washington, D.C. The ICM is based on a satellite dispenser designed and built by NRL. Although significant modifications are required, the dispenser is easily adaptable to its new mission.

▫ Point of Contact: Mr. Al Jacoby, Naval Research Laboratory, 4555 Overlook Avenue, S.W., Washington, D.C. 20375-5230, (202) 767-9145.

❒ *Naval EarthMap Observer (NEMO) Hyperspectral Remote Sensing Technology (HRST) Demonstration:* NEMO is a joint government and industry effort between the Space Technology Development Corporation and NRL. NEMO is sponsored by the Office of Naval Research (ONR) and the Defense Advanced Research Project Agency's Joint Dual Use Application Program. ONR is leading an effort to initiate hyperspectral space science and technology activities that leverage commercial assets to meet the needs of Naval Forces, the intelligence community, and the DoD.

In addition to program management and systems engineering, SED is designing the NEMO sensor imaging payload, modifying the commercial satellite bus, integrating the NEMO sensor imaging payload with the commercial satellite bus, and designing the on-board processor and algorithms to process the collected data.

NEMO is a space-based remote sensing system for collecting broad-area, synoptic, and unclassified hyperspectral imagery for Naval Forces and the Civil Sector. NEMO meets unique requirements for imaging the littoral regions on a global basis, and also meets civil needs for imagery sup-

porting land use management, agriculture, environmental studies, and mineral exploration. NEMO is scheduled for launch in mid 2000. Each NEMO satellite will have a 3-year on-orbit operational life.

▫ *Point of Contact:* Mr. Tom Wilson, Naval Research Laboratory, 4555 Overlook Avenue, S.W., Washington, D.C. 20375-5230, (202) 767-0518.

▫ *WindSat, Ocean Surface Wind Vector Measurements from Space:* SED is working in conjunction with NRL's Remote Sensing Division to develop WindSat. The WindSat program is sponsored by the Office of Naval Research (ONR), Operational Navy (OPNAV), the Air Force Space and Missile Command Space Test Program (STP), and the National Polar-orbiting Operational Environmental Satellite System (NPOESS). SED is designing, building, and testing the spacecraft, integrating it with the commercial satellite bus and scientific payload, and conducting combined systems testing.

WindSat is a demonstration program to evaluate the capability to exploit passive microwave polarimetry to measure the full ocean surface wind field (wind speed and wind direction) from space. WindSat is also capable of measuring atmospheric water vapor, cloud liquid water, rain rate, and sea ice (age, concentration, and boundary). Over land, WindSat channels are capable of mapping snow cover and estimating the water content of snow.

The sensor in the NRL's WindSat payload is a multi-frequency polarimetric microwave radiometer that passively measures microwave radiation emitted naturally from the ocean's surface and quantifies these measurements in terms of the brightness temperature. In microwave measurement systems, the amount of radiation detected depends on the properties of the scene and the observation frequency.

Wind roughening the surface of the ocean causes an increase in the brightness temperature of the microwave radiation emitted from the water's surface. Recent airborne experiments conducted jointly by NRL and the Jet Propulsion Laboratory indicate that by understanding the relationship between wind speed and surface roughness, an observer can determine not only the speed of winds at the ocean's surface but also their direction.

Integration and test will take place at NRL's Payload Processing Facility in Washington, D.C. WindSat will launch on a medium class expendable launch vehicle into a Sun-synchronous orbit in December 2001.

▫ *Point of Contact:* Mr. Dave Spencer, Naval Research Laboratory, 4555 Overlook Avenue, S.W., Washington, D.C. 20375-5230, (202) 767-6425.

J. International Agreements

At this time there are no international agreements involving FAME. There have been discussions with Dr. Michael Perryman, the leader of the European Space Agency GAIA project investigation, concerning possible collaborations. Since they are in a study phase with a deadline in June in preparation for a competitive selection, they do not want to interfere with the studies, while we are also in a competition situation. If FAME is selected, GAIA would most likely not be selected for a 2008 launch and thus delayed until 2014 or 2019. After a favorable decision is made on FAME, it would be very likely that collaborations and agreements could be developed with either ESA or other European institutions.

K. References

Bahcall, J. N. 1984, "K-giants and the total amount of matter near the Sun," ApJ, 287, 926-944

Bahcall, J. N., Flynn, C., and Gould, A. 1992, "Local dark matter from a carefully selected sample," Ap. J. 389, 234-250

Ball, B. B., Coyle, H. P., and Shapiro, I. I. Project SPICA: Dubuque: Kendall/Hunt.

Bastian, U., Gilmore, G., Halbwachs, J. L., Hog, E., Knude, J., Kovalevsky, J., Labeyrie, A., van Leeuwen, F., Lindegren, L., Pel, P. W., Schrijver, H., Stabell, R., and Thejll, P. 1993, "ROEMER, Proposal for the Third Medium Size ESA Mission (M3)," Lund (available from L. Lindegren on request)

Casertano, S. 1998, private communication

Coyle, H., Gregory, B., Sadler, P., and Shapiro, I. (1992). Project STAR. Dubuque: Kendall/Hunt

Crèzè, M., Chereul, E., Bienayme, O., and Pichon, C. 1998, A&A, 329, 920

de Vegt, C. and Ebner, H., 1974, MNRAS, 167, 169

ESA, 1997, SP-1200 vol 3

Evans, N. R. 1992, "New calibration for the Cepheid period-luminosity relation," ApJ, 389, 657-664

Evans, N. R. 1995, "The mass ratios of Cepheid binaries," ApJ, 445, 393-405

Feast, M W., and Walker, A. R. 1988, "Cepheids as distance indicators," ARA&A, 25, 345

Flynn, C. and Fuchs, D. 1994, "Density of matter in the Galactic disk," MNRAS, 270, 471-479

Germain, M. E. "Attitude Determination for FAME," draft, March 1999.

Gilden, D. L and Bahcall, J. N. 1985, "Sampling errors in the determination of the total amount of mass at the solar position," ApJ, 296, 240-258

Gilmore, G., Wyse, R, F. G., and Kuijken, K. 1989, "Kinematics, chemistry and structure of the Galaxy," ARA&A, 27, 555

Gould, A., Bahcall, J., and Flynn, C. 1995, "Disk M dwarf luminosity function from HST stars counts," ApJ (submitted)

Gould, A. and Popowski, P. 1998, "Systematics of RR Lyrae Statistical Parallax III: Apparent Magnitudes and Extinctions," ApJ, 508, 000 (astro-ph/9805176)

Gratton, R.G., Fusi Pecci, F., Carreta, E., Clementini, G., Corsi, C.E., Lattanzi, M. 1997, "Ages of Globular Clusters from Hipparcos Parallaxes of Local Subdwarfs," ApJ, 491, 749-771

Harvie, E., Rowe, J., Tsui, Yo-Kung J., "Performance Analysis of the GOES Trim Tab Solar Pressure Torque Angular Momentum Control," IERS, 1996, Tech. Note 21, ed. D. McCarthy, Obs. de Paris

Jacoby, G. H., Branch, D., CiarduBo, R., Davies, R- L, Harris, W. E., Pierce, M. J., Pritchet, C. J., Tonry, J. L, and Wekh, D. L. 1992, "A critical review of selected techniques for measuring extragalactic distances," PASP, 104, 599

Johnston, K. J., Seidelmann, P. K. et al. 1998, "Fizeau Astrometric Mapping Explorer (FAME)," in preparation

Kovalevsky, J. L. et al., 1992, A&A, 258, 7

Kuijken, K. and Gilmore, G. 1989, "The Mass-Distribution in the Galactic Disk. 3. The Local Volume Mass Density," Ann. Rev. Astron., 27, 555-627

Kuijken, K. and Gilmore, G. 1991, "The galactic disk surface mass density and the Galactic force at Z=1.1 kiloparsecs," ApJ, 367, L9-Ll3

Lindegren, L. et al., 1992, A&A, 258, 18

Lindegren, L., Perryman, M. A. C., and Loiseau, S. 1995, "Global Astrometric Interferometer for Astrophysics (GAIA)," SPIE Proceedings 2477, 91-103

Madore, B. F. and Freedman, W. L. 1991, "The Cepheid distance scale," P.A.S.P., 103, 933-957

Mazeh, Goldberg, and Latham, 1998, ApJL, 501, 199

Monet, D. G., 1999, private communication

Monet, D. G., Dahn, C. C.,Vrba, F. J., Harris, H. C., Pier, J. R., Luginbuhl, C. B., and Ables, H. D. 1992, "United States Naval Observatory CCD parallaxes of faint stars l: program description and first results," AJ, 103,638

Perryman, M. A. C. et al., 1989, The Hipparcos Mission, ESA SP-1111 vol. 3

Perryman, M. A. C. et al. 1997, The Hipparcos and Tycho Catalogues, ESA SP-1200

Phillips, J.D. and Reasenberg, R.D., 1998, "Optical System for an Astrometric Survey from Space," SPIE 3356 (in press)

Popowski, P. and Gould, A. 1998, “The RR Lyrae Distance Scale” in “Post-Hipparcos Cosmic Candles,” in press, F. Caputo and A. Heck, eds., Kluwer

Reasenberg, R.D., 1996, “The Astrometric Information Rate with a Central Obscuration in a Rectangular Aperture,” SAO Technical Memorandum

Reasenberg, R.D., and Phillips, J.D., 1998, “Design of a Spaceborne Astrometric Survey Instrument,” SPIE 3356, (in press)

Reid, I.N. 1997, “Younger and Brighter—New Distances to Globular Clusters Based on Hipparcos Parallax Measurements of Local Subdwarfs,” AJ, 114, 161-179

Röser, S., Bastian, U., de Boer, K. S., Hog, E., Röser, H. P., Schalinski, C., Schilbach, E., de Vegt, C., and Wagner, S. 1997 “DIVA - Towards Microarcsecond Global Astrometry,” Proceedings of the Hipparcos Venice '97 Symposium, Venice, May (13-16) 1997, http://astro.estec.esa.nl/Hipparcos/venice.html#session12

Schneps, M. H., and Sadler, P. M. (1988). A Private Universe. In Pyramid Films

Urban, S., Corbin T., and Wycoff G., 1998, “The ACT Reference Catalog.” A.J. 115, 2161

van den Bergh, S. 1995, “On the discrepancy between the Cepheid and RR Lyrae distance scales,” ApJ, 446, 39-43

Washwell, E. R., ed., 1996, “GOES-8 and Beyond”, SPIE Proceedings 2812, 741-752

Winter, L., 1998, private communication from PH.D thesis

L. Acronyms List

Acronym	Definition
µas	micro arcsecond
2MASS	2 Micron All Sky Survey
A	Apogee
AAS	American Astronomical Society
AB	Artium Baccalaureus
ABCL	As Built Configuration List
ACA	After Contract Award
ACE	Attitude Control Electronics
ACPS	Alexandria City Public Schools
ACS	Attitude Control System
ACU	Antenna Control Unit
ADAC	Attitude Determination and Control
ADC	Analog to Digital Convertor
ADCS	Attitude Determination and Control Subsystem
AGC	Automatic Gain Amplifier
Ah	Ampere-hour
AJ	Astronomical Journal
AKM	Apogee Kick Motor
ANC	Active Nutation Control
ANSI	American National Standards Institute
AO	Announcement of Opportunity
ApJ	Astrophysical Journal
AR	Anti-reflective
ARA&A	Annual Review of Astronomy & Astrophysics
ARC	ACS/RCS Module
as	arcsecond
ASC	Advanced Spacecraft Controller
ASP	Astronomical Society of the Pacific
ASQC	American Society for Quality Control
ASTC	Association of Science Technology Centers
ATC	Advanced Technology Center
ATEx	Advanced Tether Experiment
ATM	Apogee Trim Maneuver
ATM	Asynchronous Transfer Mode
AXAF	Advanced X-Ray Facility
B.Sc.	Bachelor's of Science
B_T	Magnitude
BA	Bachelor of Arts
BAAS	Bulletin of the American Astronomical Society
BC	Bus Controller
BCE	Battery Charge Electronics
BER	Bit Error Rate
BMDO	Ballistic Missile Defense Organization
BOL	Beginning of Life
BP	Blossom Point
BPSK	Binary Phase Shift Key
BS	Bachelor of Science
BSEE	Bachelor of Science Electrical Engineering
BW	Bandwidth
BWG	Beam Waveguide
C&T	Command and Telemetry
CAM	Camera Control Electronics
CASE	Carnegie Academy for Science Education
CCA	Circuit Card Assembly
CCAS	Cape Canaveral Air Station
CCB	Change Control Board
CCCB	Configuration Control Change Board
CCD	Charge Coupled Device
CCN	Configuration Change Notice
CCP	Contamination Control Plan
CCSDS	Consultative Committee for Space Data Systems
CCSSE	Challenger Center for Space Science Education
CDMS	Carrier Doppler Measurement System
CDR	Critical Design Review
CEU	Command Encoder Unit
CfA	Center for Astrophysics
CFHT	Canada France Hawaii Telescope
CG	Center of Gravity
CLAES	Cryogenic Limb Array Etalon Spectrometer
CLC	Challenger Learning Center
CM	Configuration Management
CMP	Configuration Management Plan
COF	Classroom of the Future
COI	Composite Optics Inc.
COMET	Common Environment for Testing
COMM	Communications
CONOPS	Concept of Operations
COP	Command Operation Procedure
COR	Contracting Officer Representative
COTS	Commercial Off-the-Shelf
CP	Control Procedures
CPET	Comprehensive Performance and Environmental Test
CPFF	Cost Plus Fixed Fee
CPIF/AF	Cost Plus Incentive Fee/Award Fee
CPU	Central Processing Unit
CPV	Common Pressure Vessel
Cs	Coefficient of Specular Reflection
CSCI	Computer Software Configuration Item
CSHELL	Cryogenic Echelle
CSR	Concept Study Report
CSR	Configuration Status Report
CSU	Channel Service Unit
CT&DH	Command, Telemetry, and Data Handling
CTE	Coefficient of Thermal Expansion
CTIO	Cerro Tololo Interamerican Observatory
CVCM	Collected Volatile Condensable Material

Acronym	Definition
DA	Digital/Analog
DA	Distributed Amplifier
dB	Decibel
DBMS	Database Management System
DC	Direct Current
DC	District of Columbia
DC	Dow Corning
DCPS	District of Columbia Public Schools
DDA	Division of Dynamical Astronomy
deg	Degree
DIVA	Deutsches Interferometer für Vielkanalphometrie und Astrometrie
DLL	Design Limit Loads
DLR	Deutsche Zentrum für Luft- und Raumfahrt
DMA	Direct Memory Access
DMR	Detailed Mission Requirement
DoD	Department of Defense
DOD	Depth of Discharge
DPA	Destructive Physical Analyses
DR	Discrepancy Report
DRIM	Data Recorder and I/F Module
DRM	Design Reference Mission
DSN	Deep Space Network
DSU	Digital Service Unit
DTC	Design to Cost
E/PO	Education & Public Outreach
ECC	Error Correction Code
ECL	Engineering Configuration List
Ed.D	Doctor of Education
Ed.M	Master of Education
EE&C	Engineering Evaluation and Checkout
EEE	Electrical, Electronic, and Electromechanical
EEPROM	Electrically Erasable Programmable Read Only Memory
ELV	Expendable Launch Vehicle
EM	Engineering Model
ENG	Engineering
EOL	End of Life
EOS	Earth Observing System
EPS	Electrical Power Subsystem
EROS	A-8
ESD	Electrostatic Discharge
EVMS	Earned Value Measurement System
E-W	East-West
EWR	Eastern/Western Range
F	Focal Length
FAM	Full Aperture Metrology
FAR	Federal Acquisition Regulation
FEP	Front End Processor
FET	Field Effect Transistor
FFP	Firm Fixed Price
FGB	Functional Cargo Block

Acronym	Definition
FIFO	First In First Out
FMEA	Failure Modes and Effect Analyses
FOV	Field of View
FPA	Focal Plane Assembly
FPGA	Field Programmable Gate Array
FRACAS	Failure Reporting and Corrective Action System
FRB	Failure Review Board
FRR	Flight Readiness Review
FSW	Flight Software
FTP	File Transfer Protocol
FY	Fiscal Year
GB	Gigabyte
GDIS	Geographic Data Information System
GDS	Ground Data System
GEO	Geosynchronous Earth Orbit
GHz	Giga Hertz
GOES	Geostationary Operational Environmental Satellite
GOMOS	Global Ozone Monitoring by Occulation of Stars
GPB	Gravity Probe B
GPS	Global Positioning System
GSE	Ground Support Equipment
GSFC	Goddard Space Flight Center
GSW	Ground Software
GTO	Geosynchronous Transfer Orbit
H/W	Hardware
HAO	High Altitude Observatory
HIRDLS	High Resolution Dynamics Limb Sounder
HKP	Housekeeping Processor
HPA	High Power Amplifier
HQ	Headquarters
HR	Hazard Reports
HRST	Hyperspectral Remote Sensing Technology
HSS	High Speed Serial
HST	Hubble Space Telescope
HTSSE	High Temperature Superconducting Space Experiment
Hz	Hertz
I	Current
I	Inertia
I&T	Integration and Test
I/F	Interface
I/O	Input/Output
IAU	International Astronomical Union
IBW	Intermediate Bandwidth
ICD	Interface Control Document
ICM	Interim Control Module
ID	Identification
IDT	Integrated Design Team
IEEE	Institute of Electrical and Electronic Engineers

Acronym	Definition
IMS	Integrated Management Schedule
IMU	Inertial Measurement Unit
IPDT	Integrated Product Development Team
IPT	Integrated Product Team
IR	Infrared
IRAS	Infrared Astronomical Satellite
IRTF	Infrared Telescope Facility
ISC	Integrated S/C Controller
ISDN	Integrated Services Digital Network
ISO	International Standard Organization
ISS	International Space Station
ISWG	Space Interferometry Working Group
JPL	Jet Propulsion Lab
kb	kilobit
kb/s	kilobits per second
kHz	Kilohertz
km	Kilometer
KPNO	Kitt Peak National Observatory
KSC	Kennedy Space Center
L	Launch
LACE	Low-power Atmospheric Compensation Experiment
LAN	Longitude of Ascending Node
LHC	Left Hand Circular
LIPS III	Living Plume Shield
LMF	Lockheed Martin Fairchild
LMFS	Lockheed Martin Federal Systems
LMMS ATC	Lockheed Martin Missile and Space Advanced Technology Center
LNA	Low Noise Amplifier
LOR	Launching and Orbital Raising
LOS	Line-of-Sight
LSB	Lower Side Band
LSTP	Launch Site Test Plan
L/V	Launch Vehicle
M&P	Materials and Parts
M.Sc	Master of Science
MA	Massachusetts
MA	Master of Arts
mas	milliarcsecond
MACHO	Massive Compact Halo Object
MAP	Microwave Anisotropy Probe
MAP	Mitigation Action Plan
MAR	MIDEX Assurance Requirements
Mbps	Millions of bits per sec
MCM	Multi-chip Module
MD	Maryland
MDI	Michelson Doppler Imager
MDR	Mission Design Review
MDRA	Mission Definition and Requirement Agreement
MECO	Main Engine Cut Off

Acronym	Definition
MFG	Manufacturing
MIDEX	Medium-class Explorer
Mil	Military
MIPS	Millions of Instructions Per Second
MIRFI	Mid-Infrared Fabry-Perot Imager
MIRORS	Mid-Infrared Optimized Resolution Spacecraft
MIT	Massachusetts Institute of Technology
mm	millimeter
MNRAS	Monthly Notices of the Royal Astronomical Observatory
MO&DA	Mission Operations and Data Analysis
MOB	Management Oversight Board
MOC	Mission Operations Center
MOI	Moment of Inertia
MOS	Mission Operations System
MOS	Museum of Science
MP	Manufacturing Procedure
MPP	Multi-phased Pin
MPTB	Microelectronics and Phototonics Test Bed
m_R	R Band Apparent Magnitude
MRB	Material Board Review
MRR	Mission Requirements Review
MS	Masters of Science
MSPSP	Missile System Prelaunch Safety Package
MTI	Multispectral Thermal Imager
MTSat	Multipurpose Transportation Satellite
m_V	V Band Apparent Magnitude
N	Number
NAR	Non-Advocate Review
NAS/NRC	National Academy of Science/National Research Council
NASA	National Aeronautics and Space Administration
NaSB	Sodium Sulfur Battery
NCAR	National Center for Atmospheric Research
NCST	Naval Center for Space Technology
ND	Neutral Density
NDE	Non-Destructive Examination
NEMO	Navy EarthMap Observer
NEPA	National Environmental Policy Act
NFARS	NASA FAR Supplement
NFS	Network File System
NGST	Next Generation Space Telescope
NiH2	Nickel Hydrogen
NISN	NASA Integrated Services Network
nm	Nanometers
Nm	Newton meter
NMI	Nautical Miles
NMR	Nonconforming Material Report
NOAA	National Oceanographic Atmospheric Administration

Acronym	Definition
NORAD	North American Air Defense
NPOESS	National Polar-orbit Operational Environmental Satellite System
NPOI	Navy Prototype Optical Interferometer
NRAO	National Radio Astronomy Observatory
NRL	Naval Research Laboratory
NRZ	Non Return to Zero
N-S	North-South
NSES	National Science Education Standards
NSF	National Science Foundation
NWCF	Navy Working Capital Fund
OCB	Ordnance Control Box
OCS	Ordnance Control System
OD	Orbit Determination
OLB	Open Loop Burn
OLS	Orbital Launch Services
ONR	Office of Naval Research
OPNAV	Operational Navy
OS	Operating System
OS/COMET	Open Systems COMET
OSC	Oscillators
OSDL	Optical Systems Design Laboratory
OTS	Off-the-Shelf
OXCO	Oven Controller Crystal Oscillator
P	Pressure
P/L	Payload
P/N	Part Number
PAP	Product Assurance Program
PASP	Publications of the Astronomical Society of the Pacific
PC	Personal Computer
PCB	Printed Circuit Board
PCDE	Power Control and Distribution Electronics
PCDU	Power Control and Distribution Unit
PCM	Pulse Code Modulation
PCT	Power Converter and Timing
PDD	Preliminary Design Document
PDI	Planet Discover Interferometer
PDR	Preliminary Design Review
PFIRCAM	Prime Focus Infrared Cameras
PGS	Programmable Gain Stage
Ph.D	Doctor of Philosophy
PI	Principal Investigator
PIXIE	Polar Ionospheric X-Ray Imaging Experiment
PM	Phase Modulation
PM	Program Manager
PMM	Precise Measuring Machine
PMS	Performance Measurement Systems
PO	Purchase Order
POINTS	Precision Optical Interferometer for Space
ppb	parts per billion

Acronym	Definition
PPL	Preferred Parts List
pps	pulses per second
PRNU	Photo Responsivity Non-Uniformity
PRT	Platinum Resistance Thermometer
PSF	Point Spread Function
PSK	Phase Shift Keyed
PSLA	Project Service Level Agreement
PSM	Project Safety Manager
PWB	Printed Wiring Board
PWR	Power
QA	Quality Assurance
QAE	Quality Assurance Engineer
QAP	Quality Assurance Plan
QC	Quality Control
QHSS	Quad High Speed Serial
RCS	Reaction Control System
RF	Radio Frequency
RHA	Radiation Hardness Assurance
RHC	Right Hand Circular
RISC	Reduced Instruction Set Computing
ROSAT	Röntgen Satellite
RSC	Raytheon Systems Company
RSS	Root Sum Square
RT	Remote Terminal
RTE	Real Time Executable
RTOS	Real Time Operating System
RTV	Room Temperature Vulcanizing
RX	Receive
S/A	Solar Array
S/C	Spacecraft
S/W	Software
SAO	Smithsonian Astrophysical Observatory
SAL	Space Astronomy Laboratory
SAR	Safety Assessment Report
SCIO	Spacecraft Input/Output Module
SCL	Spacecraft Command Language
SCM	Spacecraft Control Module
SDIO	Strategic Defense Initiative Organization
SDP	Software Development Plan
SDSS	Sloan Digital Sky Survey
SED	Science Education Department
SEDNet	Science Education Department Network
SEIT	System Engineering and Integration Team
SEU	Single Event Upset
SIM	Space Interferometry Mission
SINDA	Systems Improved Numerical Differencing Analyzer
SIO	Serial Input/Output
SIRTF	Space Infrared Telescope Facility
SLS	Shuttle Launch System
SNR	Single to Noise Ratio
SOC	Science Operations Center

Acronym	Definition
SOH	State of Health
SOHO	Solar and Heliospheric Observatory
SOW	Statement of Work
SPDT	Single Pole Double Throw
SPICA	Support Program for Instructional Competency in Astronomy
SPIE	Society of Photo-Optical Instrumentation Engineers
SPP	Safety Program Plan
SPS	Software Product Specification
SQA	Software Quality Assurance
SR&QA	Safety, Reliability, and Quality Assurance
SRM	Solid Rocket Motor
SRR	System Requirements Review
SS	Sun Sensor
SSDR	Solid State Data Recorder
SSM	System Safety Manager
SSN	Space Surveillance Network
SSPA	Solid State Power Amplifier
SSPP	System Safety Program Plan
SSR	Solid State Recorder
SSRDS	Solar Array/Sun Shield Release and Deployment Subsystem
SST	Start-Stop Technology
ST	Science Team
ST	Star Tracker
STAR	Science Through its Astronomical Roots
STDN	Spaceflight Tracking and Data Network
STEX	Space Technology Experiment
STK	Satellite Tool Kit
STP	Software Test Plan
STP	Space Test Program
SXI	Solar X-Ray Imager
SXT	Soft X-Ray Telescope
T&M	Time & Material
T	Temperature
TASSII	Total and Spectral Solar Irradiance Investigation
TBR	to be reviewed
TCP/IP	Transmission Control Protocol/Internet Protocol
TDI	Time Delay Integration
TDRSS	Tracking and Data Relay Satellite System
TDVT	Thermal Design Verification Test
TIG	Tungsten Inert Gas
TiPS	Tether Physics Survivability Experiment
TMG	Thermal Model Generator
TML	Total Mass Loss
TOM	Thermal Opto-Mechanical
TOPSSWG	Toward Other Planetary Systems Science Working Group
TRACE	Transition Region and Corona Mission Explorer
TRASYS	Thermal Radiation Analyzer System
TSIM	Total Solar Irradiance Mission
TSS	Telescope Subsystem
TVAC	Thermal Vacuum
TX	Transmit
UARS	Upper Atmospheric Research Satellite
UCAC	USNO CCD Astrograph Catalog
UDM	Uplink/Downlink Module
ULE	Ultra Low Expansion
UNEX	University Class Explorer
USAF	United States Air Force
USB	Upper Side Band
USNO	U.S. Naval Observatory
USSR	Union of Soviet Socialist Republic
UTC	Universal Time Coordinates
UV	Ultraviolet
UVPI	Ultra Violet Plume Instrument
V	Voltage
VAFB	Vandenberg Air Force Base
Vdc	Volts direct current
VLBI	Very Long Baseline Interferometry
VME	Versa Module European
VOL	Volume
VT	Voltage Temperature
VT	Voltage Temperature
W	Watts
WCA	Worst Case Analysis
WF/PC	Wide Field/Planetary Camera
WG	Waveguide
XMM	X-Ray Multi-Mirror Mission
XMM-EPIC	XMM European Photon Imaging Camera
XMM-OM	XMM Optical/UV Monitor
XMM-RGS	XMM Reflection Grating Spectrograph