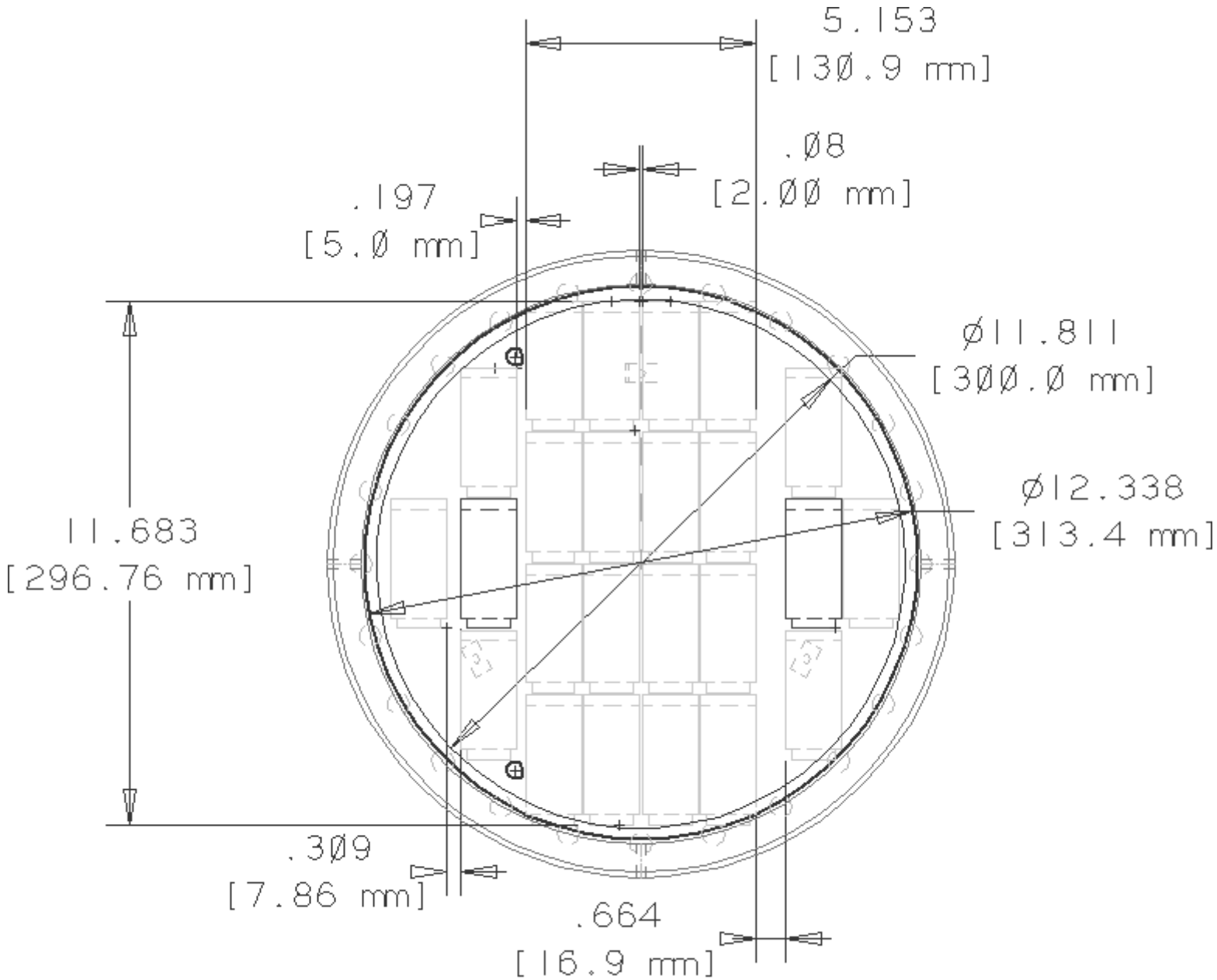

SCOTTS OPTION

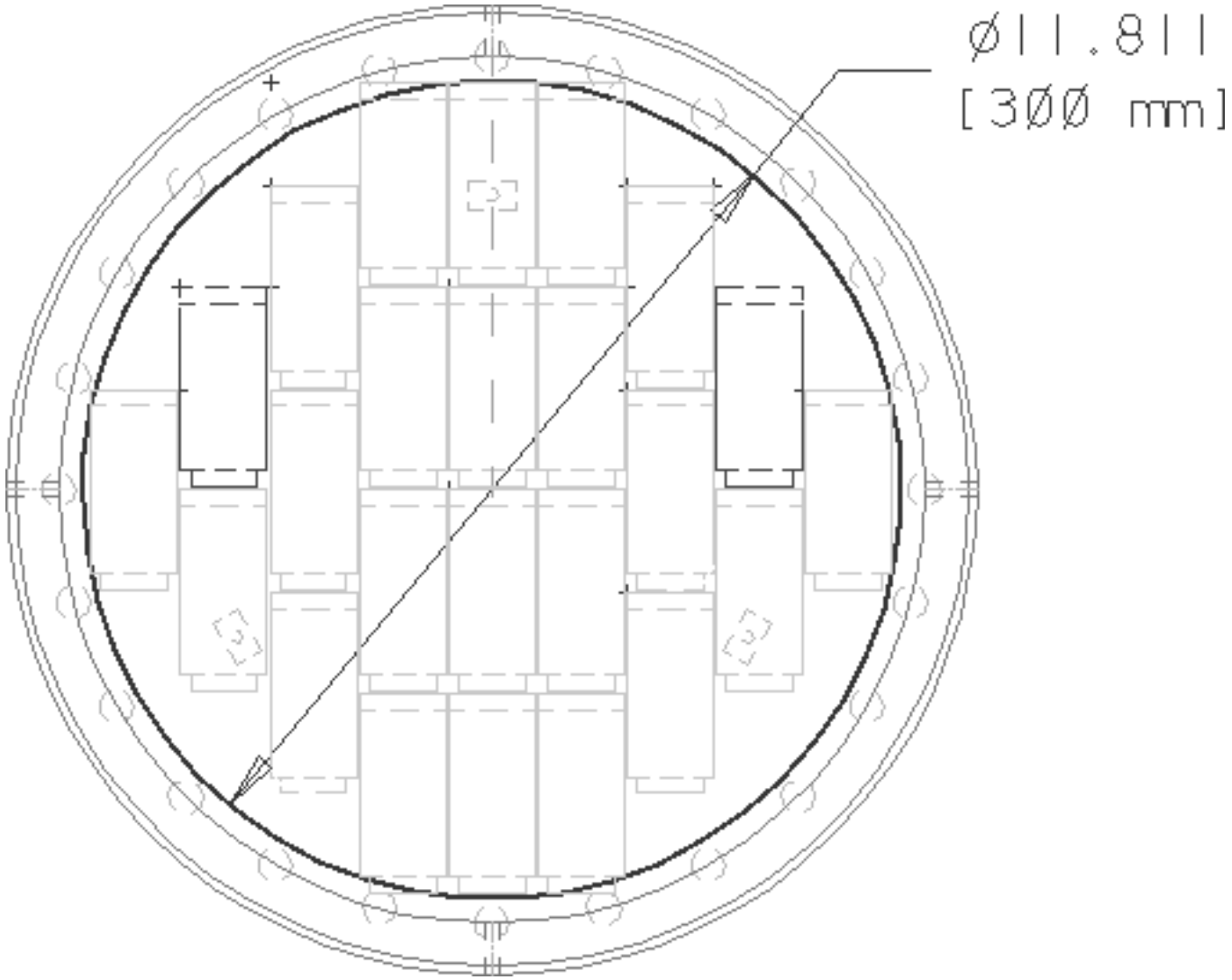
Ø11.811
[300 mm]