Technical Interchange Meeting

Ron Mader
Mechanical Manager
NRL
202-404-3470
rmader@space.nrl.navy.mil
October 25th thru 26th

Instrument Interface Control Volume
Two Panel Array Design

- The Control Volume is a Culmination of Three Factors; Stowed Arrays, Fairing Envelope, and Operational Sun Angle
- Need to Add Additional Stay out Constraints for Thrusters and Possibly Lateral Looking Omni Antennas

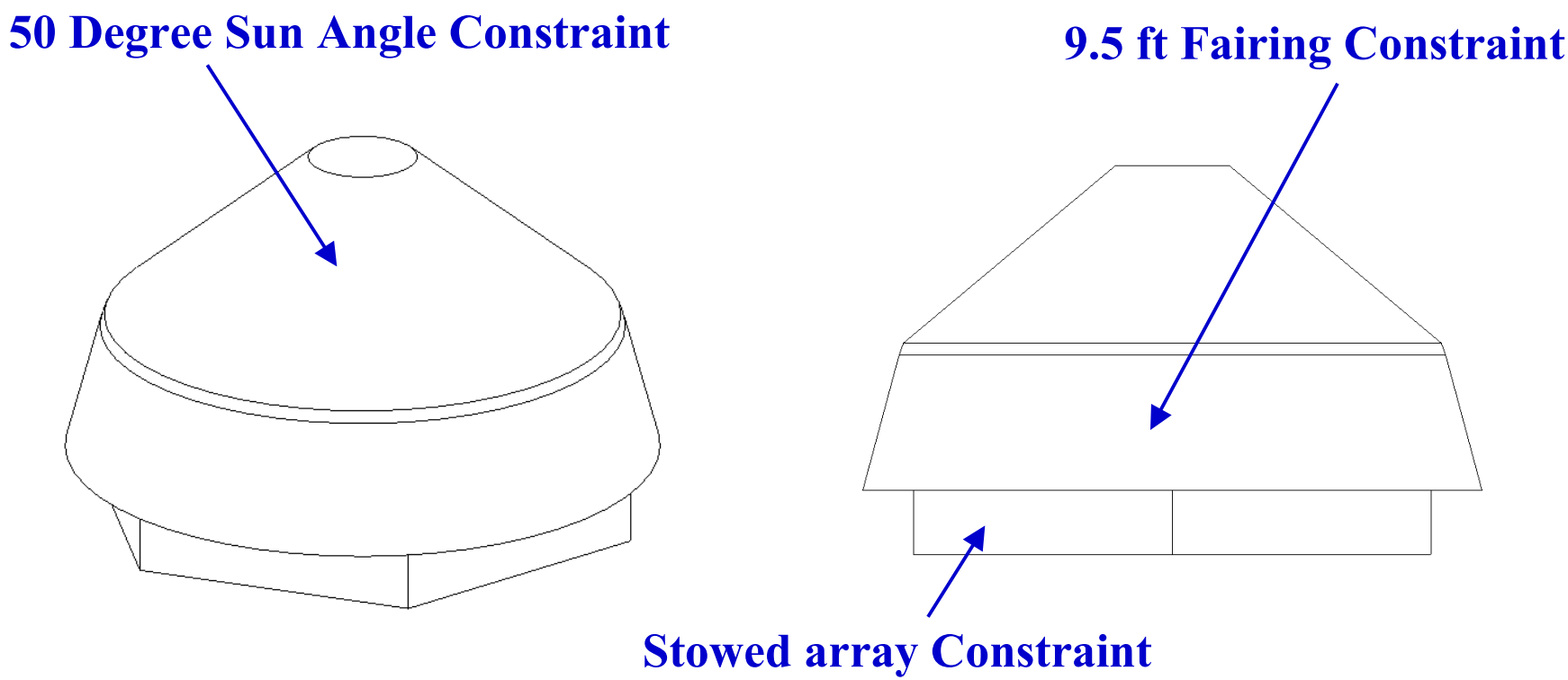

Instrument Interface Control Volume
One Panel Array Design

- The Control Volume is a Culmination of Two Factors; Stowed Arrays and Operational Sun Angle
- Need to Add Additional Stay out Constraints for Thrusters and Possibly Lateral Looking Omni Antennas

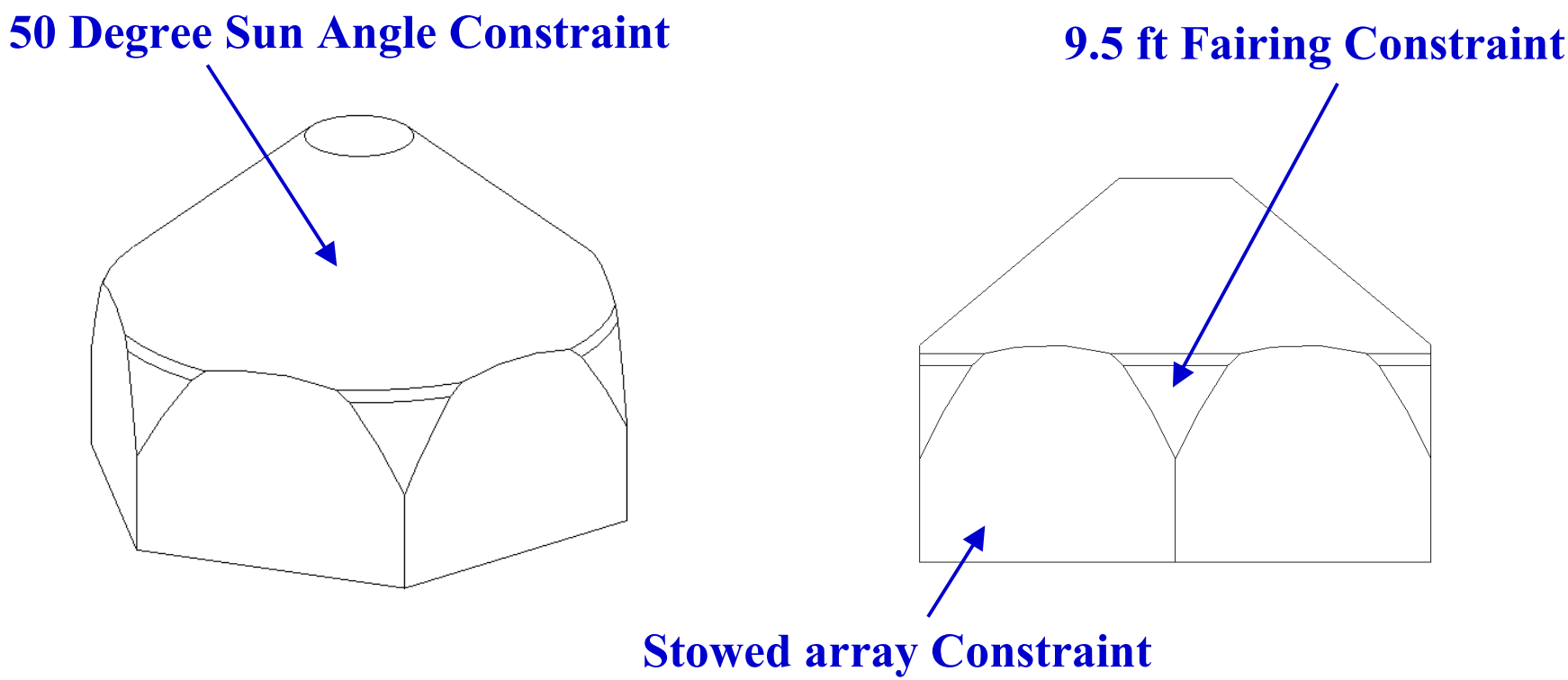

55 Degree Two Panel Design

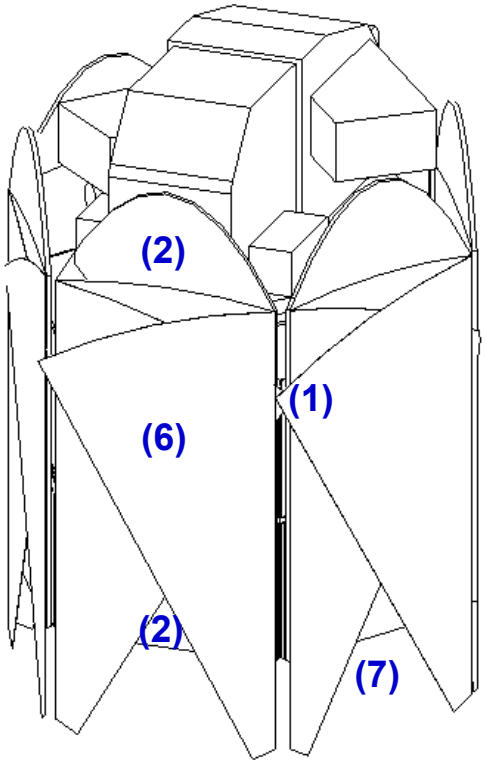

Cons

(1) Mechanical Interference
(2) Stowed Solar Cell Area (873 in^2)
(3) Difficult Setting Both Marmon Clamps
(4) Difficult ACS Solar Procession Control
(5) Overall Mass of Solar Array Assembly
(6) One Point Array Arm Deployment
(7) Lateral Omni Antenna Coverage
(8) Solar Array Flatness After Deployment

Pros

(a) Operational Sun Angle

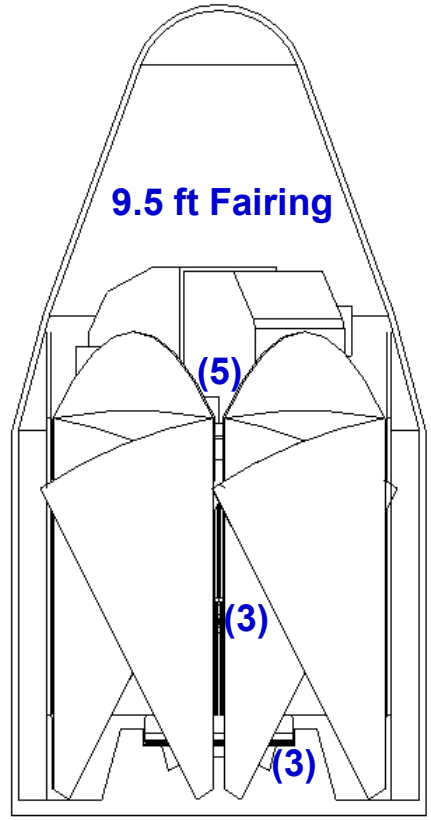

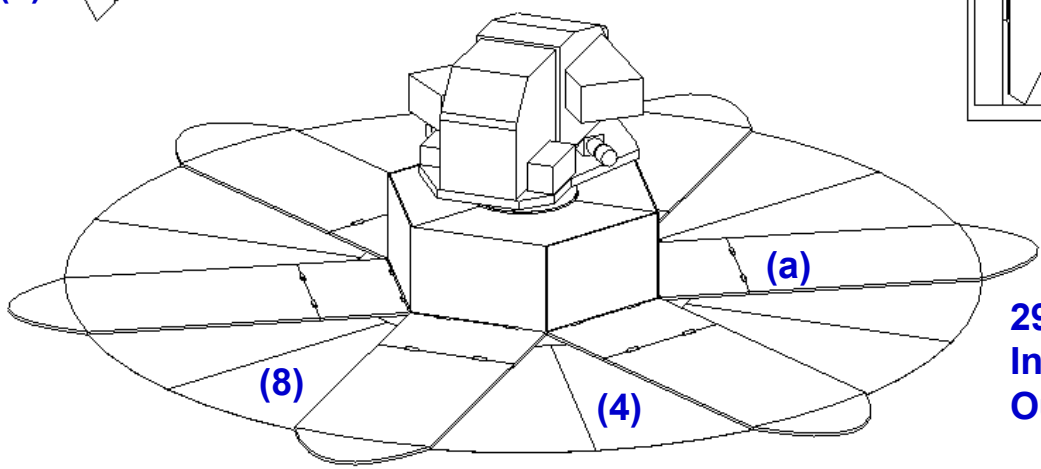

290.5 in Diameter
Inner Panel = 28.6 inches
Outer Panel = 74.5 inches

50 Degree Two Panel Design

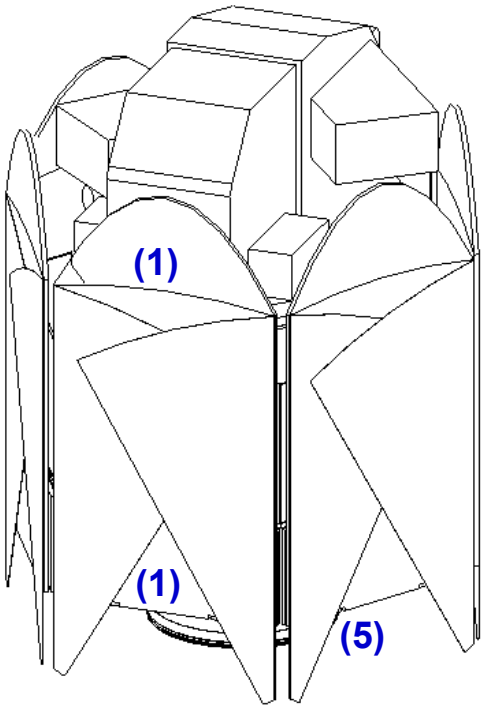

Cons

(1) Stowed Solar Cell Area (990 in^2)
(2) Difficult Setting SC Marmon Clamp
(3) Difficult ACS Solar Procession Control
(4) Overall Mass of Solar Array Assembly
(5) Lateral Omni Antenna Coverage
(6) Solar Array Flatness After Deployment

Pros

(a) Operational Sun Angle

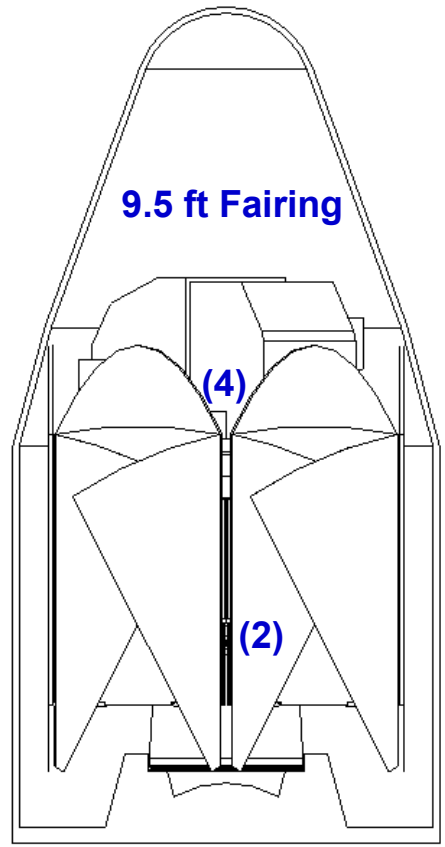

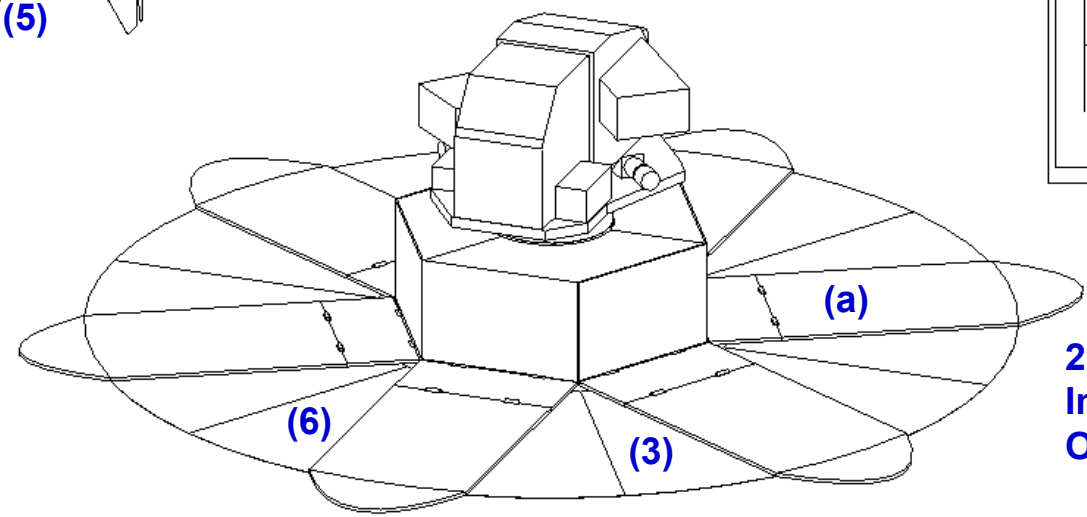

256.0 in Diameter
Inner Panel = 20.0 inches
Outer Panel = 65.7 inches

45 Degree Two Panel Design

Cons

(1) Operational Sun Angle
(2) Solar Array Flatness After Deployment

Pros

(a) Stowed Solar Cell Area (1,218 in^2)
(b) Overall Mass of Solar Array Assembly
(c) ACS Solar Procession Control
(d) Setting Both Marmon Clamps
(e) Lateral Omni Antenna Coverage

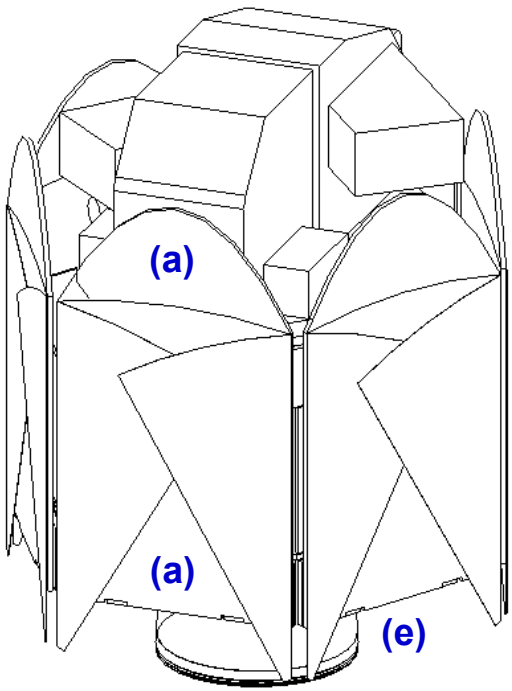

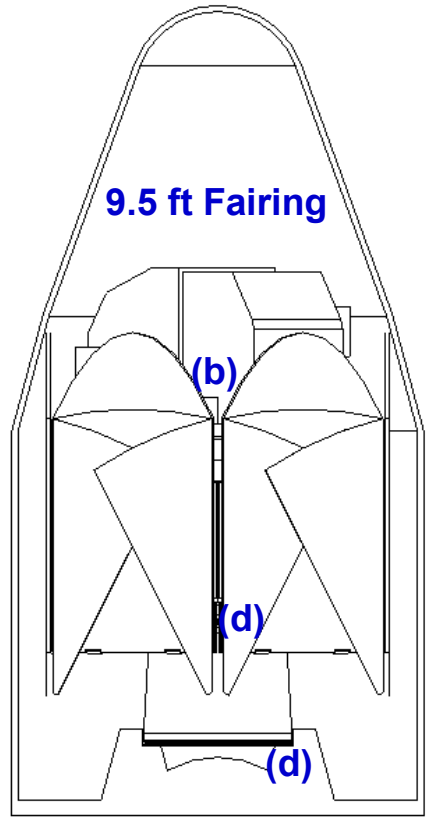

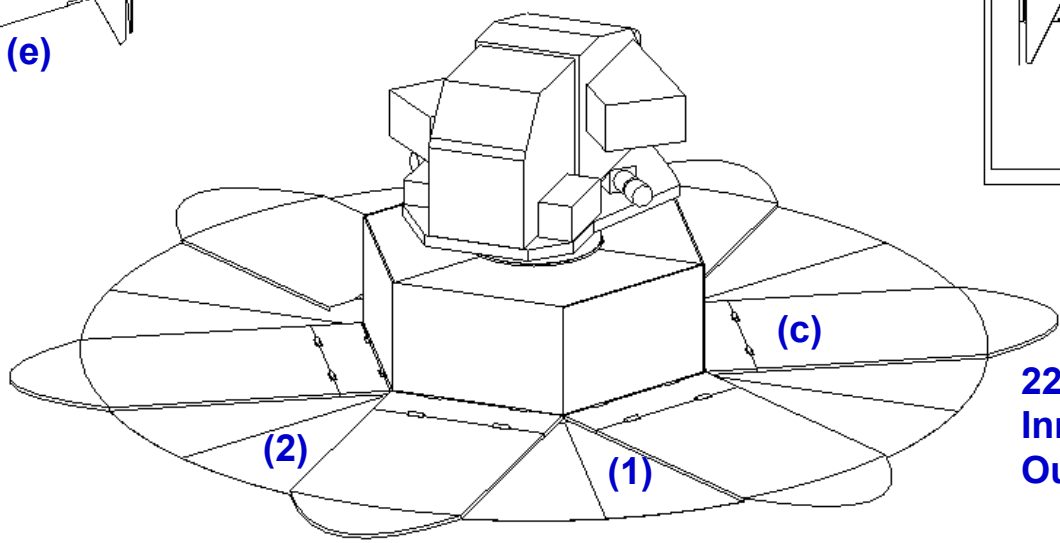

228.0 in Diameter
Inner Panel = 12.7 inches
Outer Panel = 58.7 inches

40 Degree Two Panel Design

Cons

(1) Operational Sun Angle
(2) Solar Array Flatness After Deployment

Pros

(a) Stowed Solar Cell Area (1,441 in^2)
(b) Overall Mass of Solar Array Assembly
(c) ACS Solar Procession Control
(d) Setting Both Marmon Clamps
(e) Lateral Omni Antenna Coverage

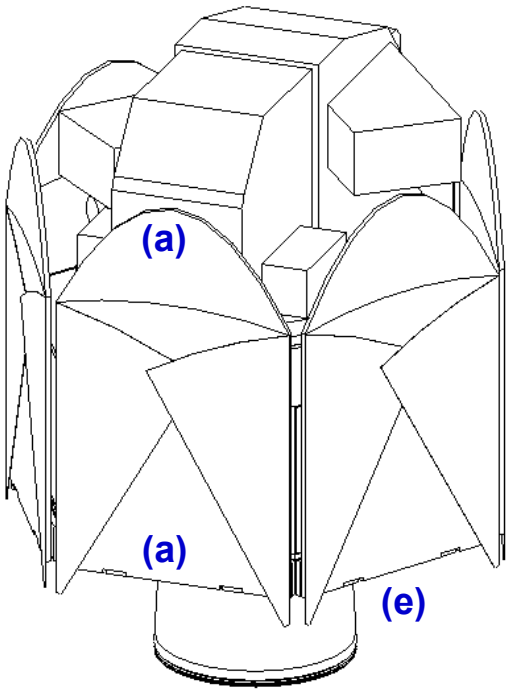

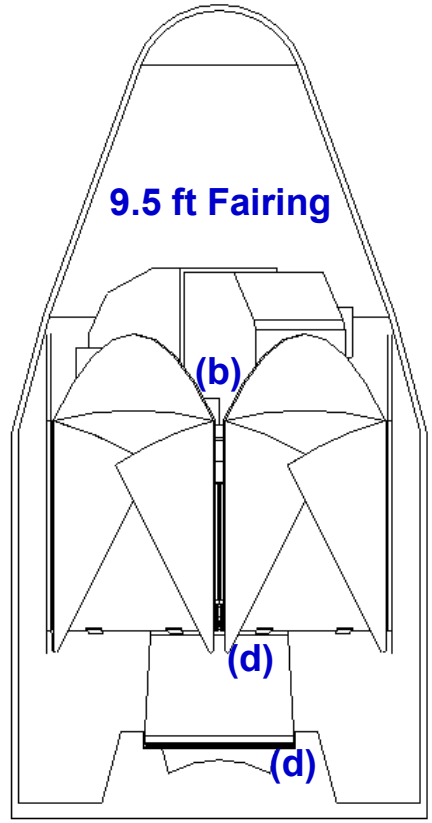

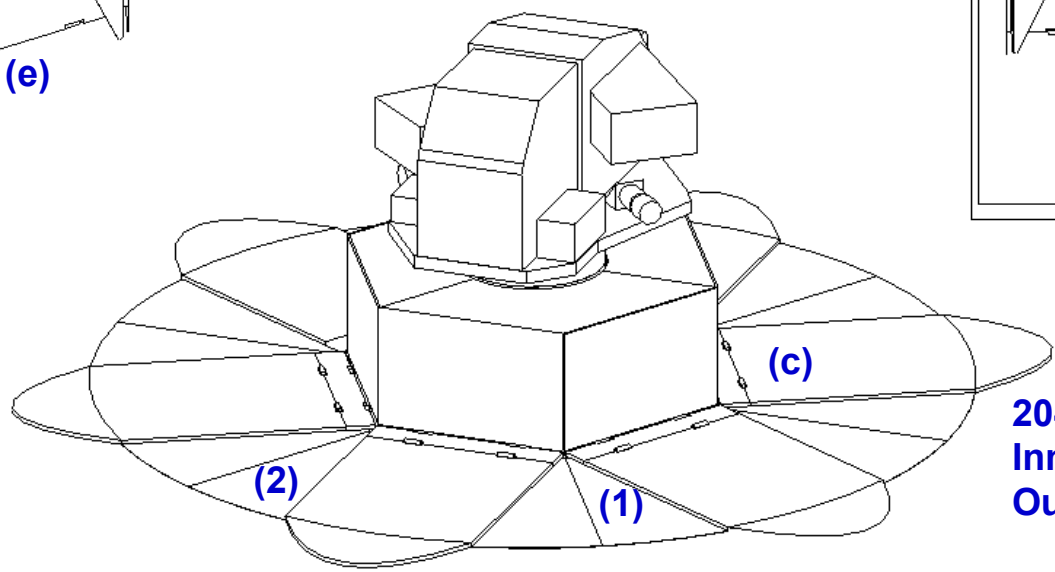

204.5 in Diameter
Inner Panel = 6.8 inches
Outer Panel = 52.5 inches

50 Degree One Panel Design

Cons

(1) Stowed Omni Antenna Coverage

Pros

(a) Operational Sun Angle
(b) Stowed Solar Cell Area (1,565.0 in^2)
(c) Overall Mass of Solar Array Assembly
(d) ACS Solar Procession Control
(e) Setting Both Marmon Clamps
(f) Solar Array Flatness After Deployment

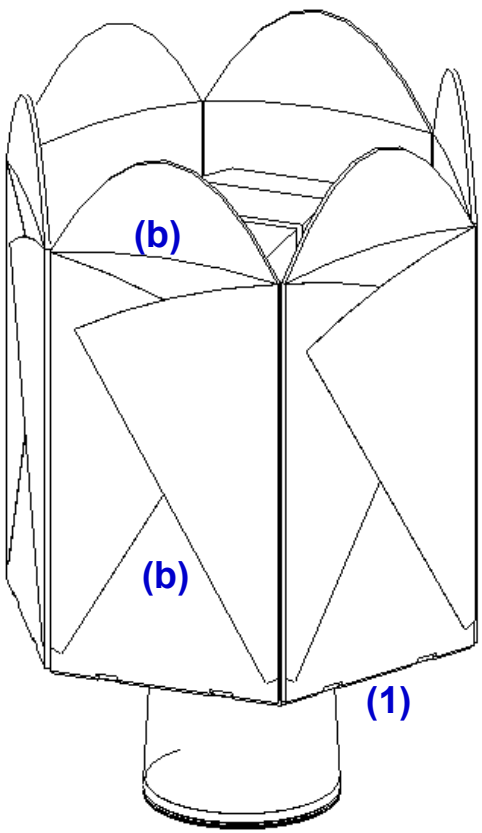

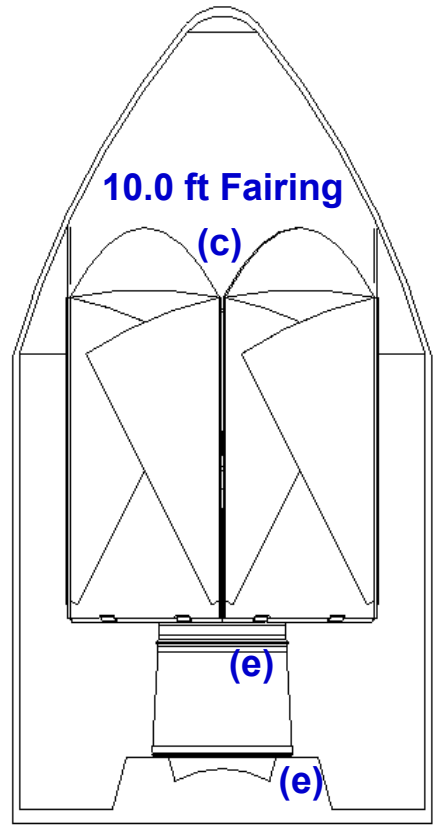

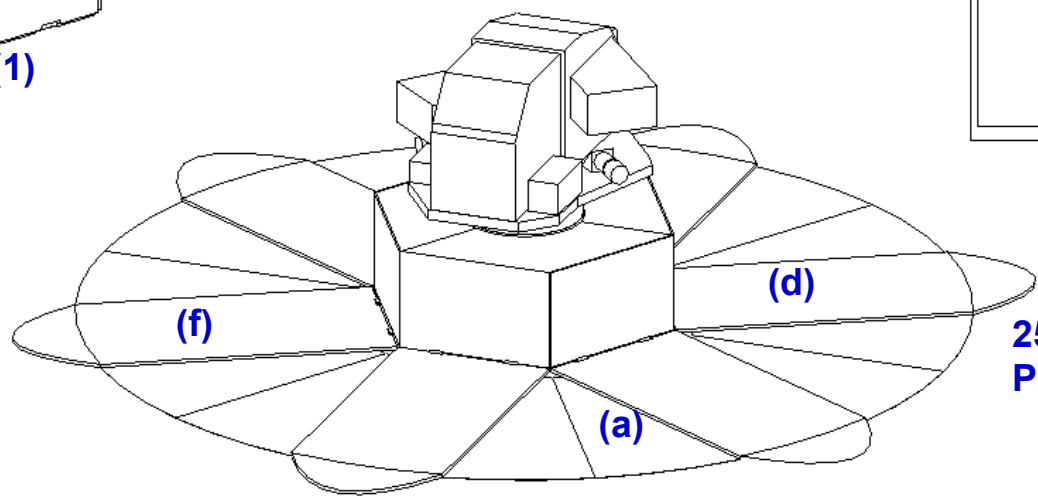

256.0 in Diameter
Panel = 85.7 inches

45 Degree One Panel Design

Cons

(1) Operational Sun Angle
(2) Stowed Omni Antenna Coverage

Pros

(a) Stowed Solar Cell Area (1,588.0 in^2)
(b) Overall Mass of Solar Array Assembly
(c) ACS Solar Procession Control
(d) Setting Both Marmon Clamps
(e) Solar Array Flatness After Deployment

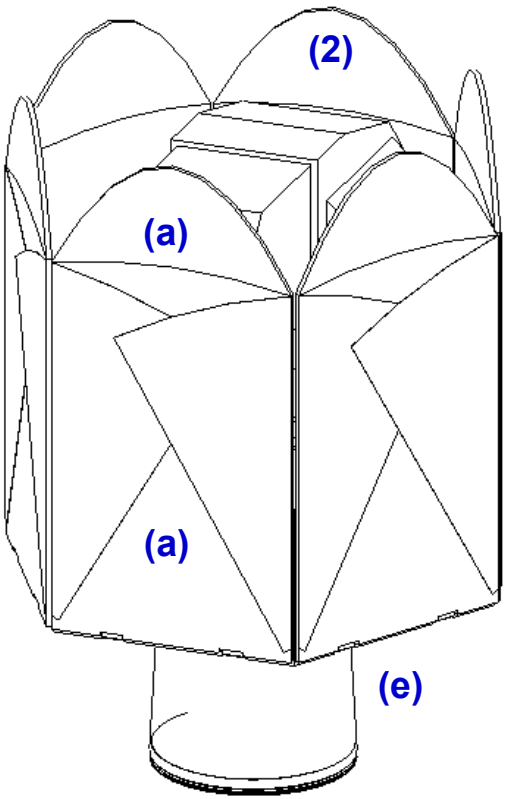

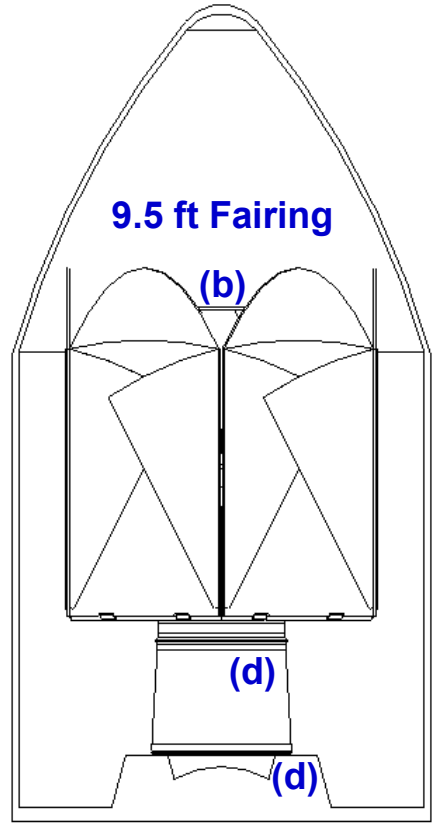

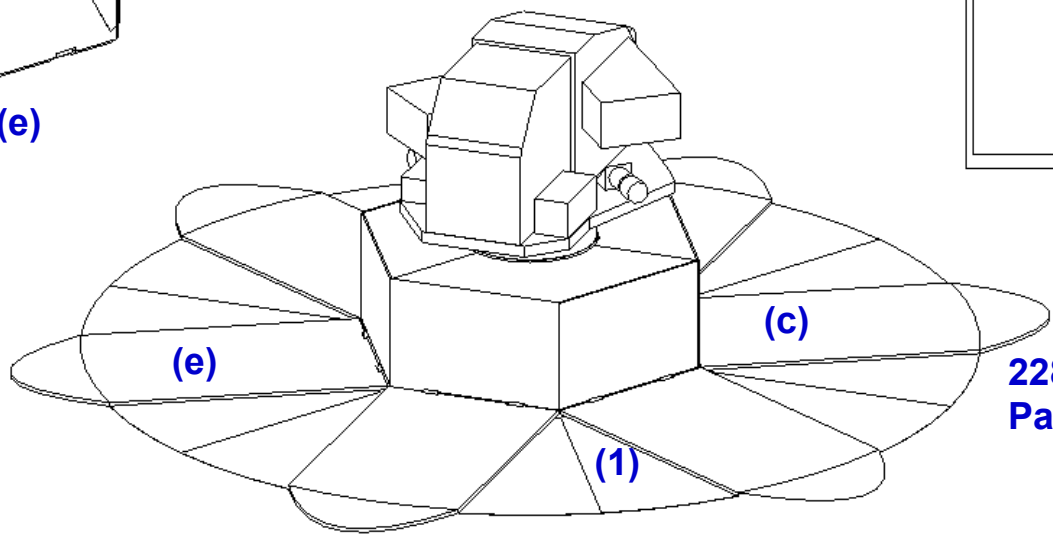

228.0 in Diameter
Panel = 71.4 inches

Environmental Loads (1 of 8)

- **Static Acceleration Design Limit Loads**
  - **All Components and Bracketry**

Design Accelerations

Component Wt. (Lbs)	G's
0.1	60
1	60
100	20

Design Acceleration Philosophy

* These accelerations are to be used for component testing by sine burst or centrifuge,

- Apprpriate factors of safety shall be applied to these accelerations

- For designated components, the acceleration level from this curve may also be used for vibration test tailoring

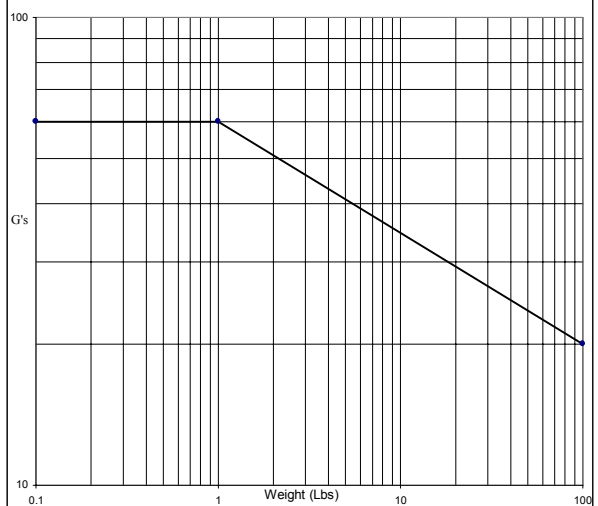

Fame Flight Level Acceleration Environment for Components
All Three Axes

  - **Instrument and System**

	SYSTEM		INSTRUMENT *	
LOAD CASE	Axial	Lateral	Axial	Lateral
LV Liftoff	2.8 -0.2	3.0 -3.0	3.9 -0.3	7.0 -7.0
LV MECO	8.2 0	0.1 -0.1	11.3 0	0.2 -0.2
SC AKM Firing	4.7 -4.7	60 RPM	6.1 -6.1	60 RPM
On Orbit	0.3 -0.3	0.3 -0.3	0.3 -0.3	0.3 -0.3
Ground Operations	2.0 -2.0	2.0 -2.0	2.0 -2.0	2.0 -2.0

* **More Detailed Analysis Will be Performed to Refine the Instrument Loads**

Environmental Loads (2 of 8)

- **Random Vibration Design Limit Loads**
  - **Instrument Components**

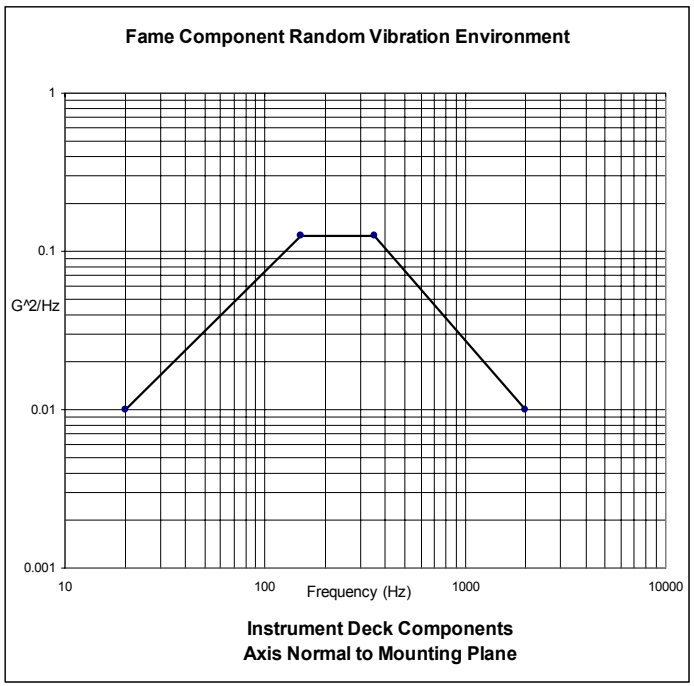

Flight Level Environment

Frequency (Hz)	G^2/Hz
20	0.01
150	0.125
350	0.125
2000	0.01

9.3 Grms

Test Levels

	Margin Above Flight Level (dB)	Duration (Minutes)
Non-Flight Prototypes (Design & Qualification Level)	6	2
Flight Units (Protoflight Acceptance Test)	3	2

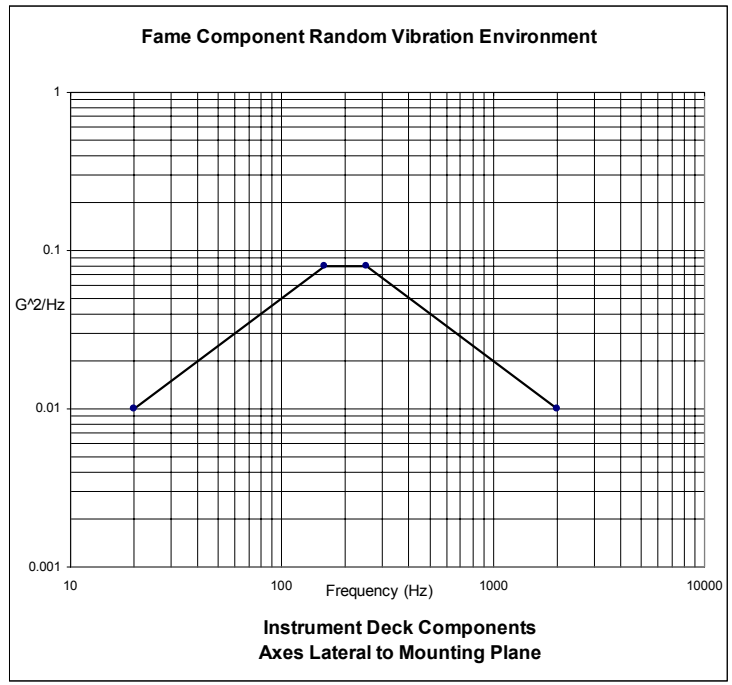

Flight Level Environment

Frequency (Hz)	G^2/Hz
20	0.01
160	0.08
250	0.08
2000	0.01

7.4 Grms

Test Levels

	Margin Above Flight Level (dB)	Duration (Minutes)
Non-Flight Prototypes (Design & Qualification Level)	6	2
Flight Units (Protoflight Acceptance Test)	3	2

Environmental Loads (3 of 8)

- **Random Vibration Design Limit Loads**
  - **Bus Components**

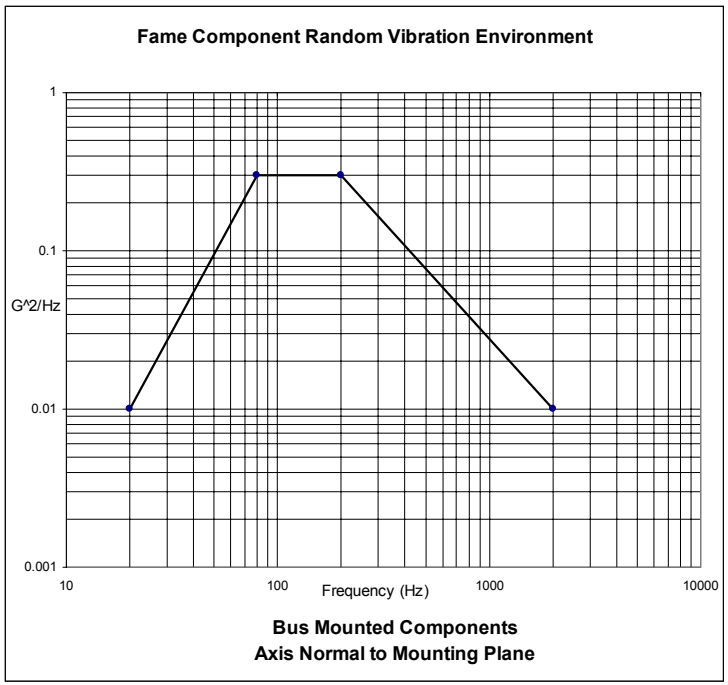

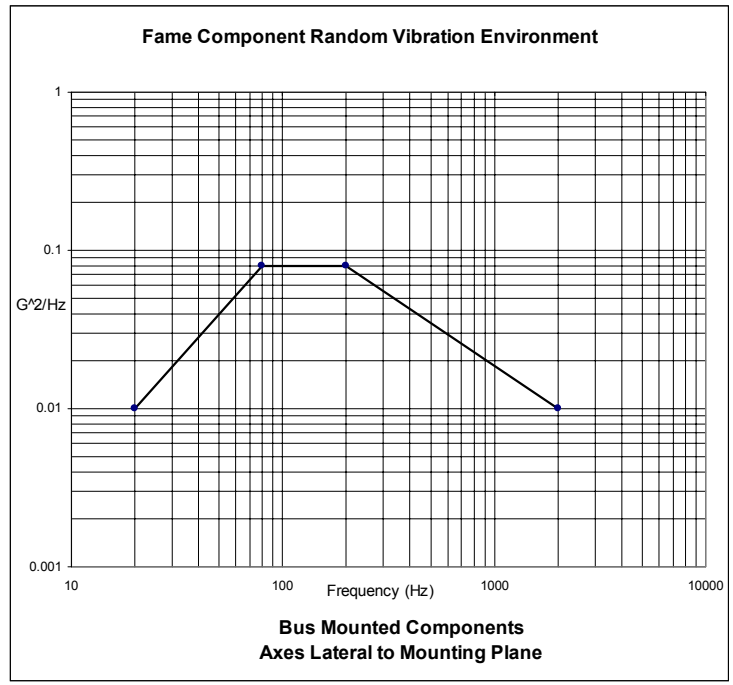

Flight Level Environment

Frequency (Hz)	G^2/Hz
20	0.01
80	0.3
200	0.3
2000	0.01

11.3 Grms

Test Levels

	Margin Above Flight Level (dB)	Duration (Minutes)
Non-Flight Prototypes (Design & Qualification Level)	6	2
Flight Units (Protoflight Acceptance Test)	3	2

Flight Level Environment

Frequency (Hz)	G^2/Hz
20	0.01
80	0.08
200	0.08
2000	0.01

7.4 Grms

Test Levels

	Margin Above Flight Level (dB)	Duration (Minutes)
Non-Flight Prototypes (Design & Qualification Level)	6	2
Flight Units (Protoflight Acceptance Test)	3	2

Environmental Loads (4 of 8)

- **Random Vibration Design Limit Loads**
  - **Instrument Subsystem**

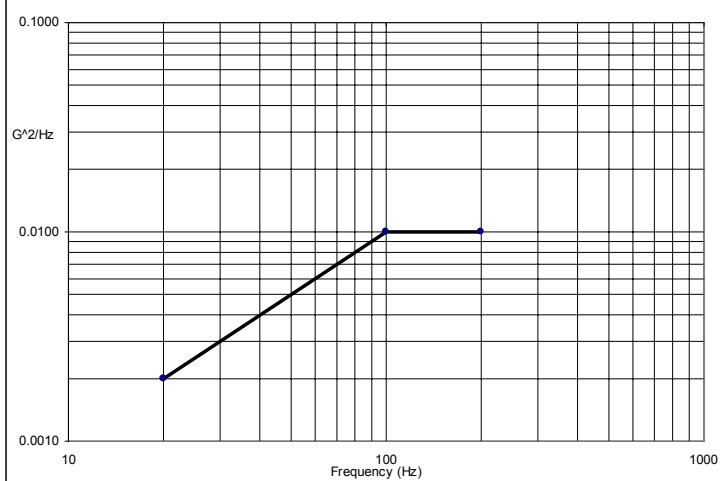

FAME System Flight Level Random Vibration Environment

Flight Level Environment

1.2 Grms Overall

Frequency (Hz)	G^2/Hz
20	0.0020
100	0.0100
200	0.0100

All 3 Axes

Test Level

	Margin Above Flight Level (dB)	Duration (Minutes)
Engineering Model (Qualification Level)	6	2
Flight Spacecraft (Protoflight Acceptance	3	2

Note: The Spectrum will be tailored to keep primary structural responses below Dessign Limit Load X 1.05

Environmental Loads (5 of 8)

- **Random Vibration Design Limit Loads**
  - **System**

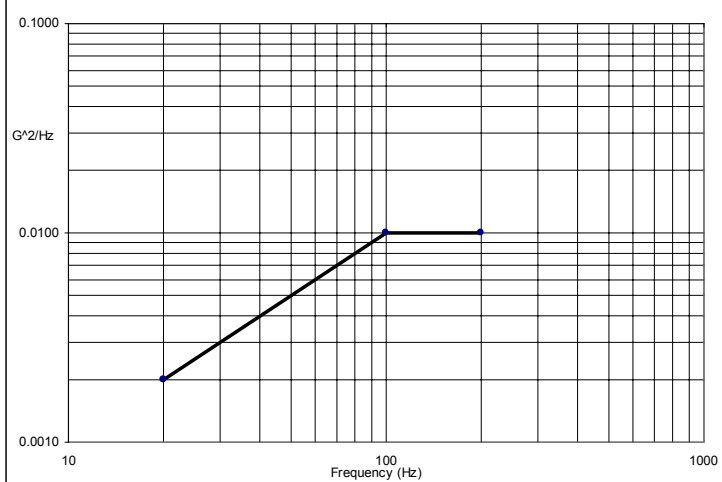

FAME System Flight Level Random Vibration Environment

Flight Level Environment

1.2 Grms Overall

Frequency (Hz)	G^2/Hz
20	0.0020
100	0.0100
200	0.0100

All 3 Axes

Test Level

	Margin Above Flight Level (dB)	Duration (Minutes)
Engineering Model (Qualification Level)	6	2
Flight Spacecraft (Protoflight Acceptance	3	2

Note: The Spectrum will be tailored to keep primary structural responses below Dessign Limit Load X 1.05

Environmental Loads (6 of 8)

- **Acoustic Vibration Design Limit Loads**
  - **Components, Subsystems, and Systems**

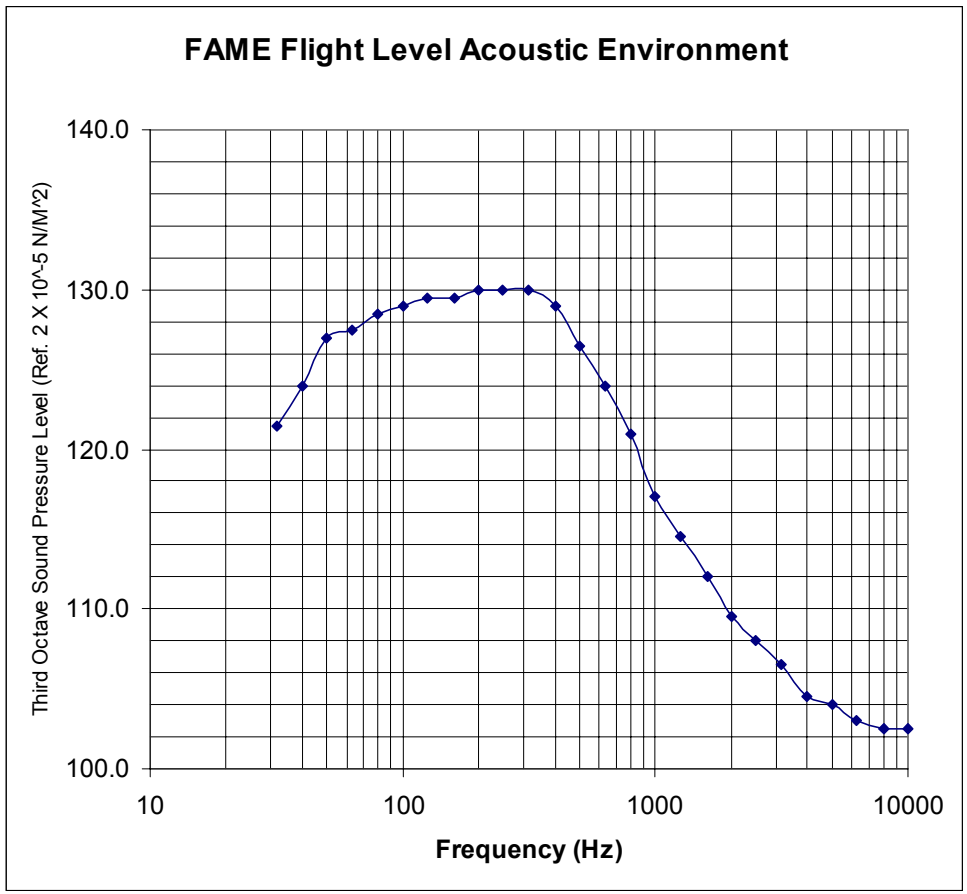

One Third Octave Frequency (Hz)	SPL (dB)
32	121.5
40	124.0
50	127.0
63	127.5
80	128.5
100	129.0
125	129.5
160	129.5
200	130.0
250	130.0
315	130.0
400	129.0
500	126.5
630	124.0
800	121.0
1000	117.0
1250	114.5
1600	112.0
2000	109.5
2500	108.0
3150	106.5
4000	104.5
5000	104.0
6300	103.0
8000	102.5
10000	102.5
OA	139.8
Duration	1 Minute

Environmental Loads (7 of 8)

- **Shock Vibration Design Limit Loads**
  - **Instrument Components**

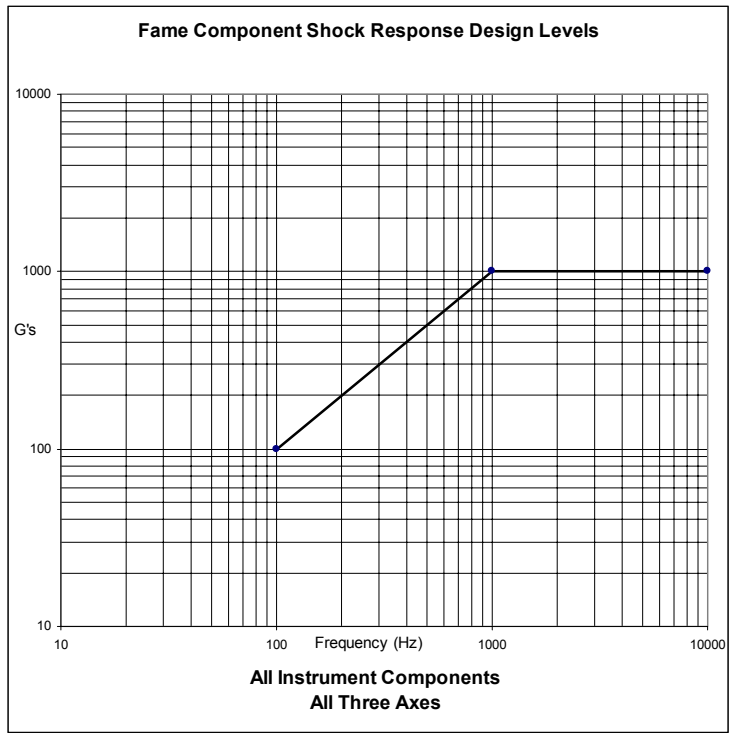

Design Environment
Shock Response Spectrum Levels

Frequency (Hz)	G's
100	100
1000	1000
10000	1000

Q = 10

Environmental Loads (8 of 8)

- **Shock Vibration Design Limit Loads**
  - **Bus Components**

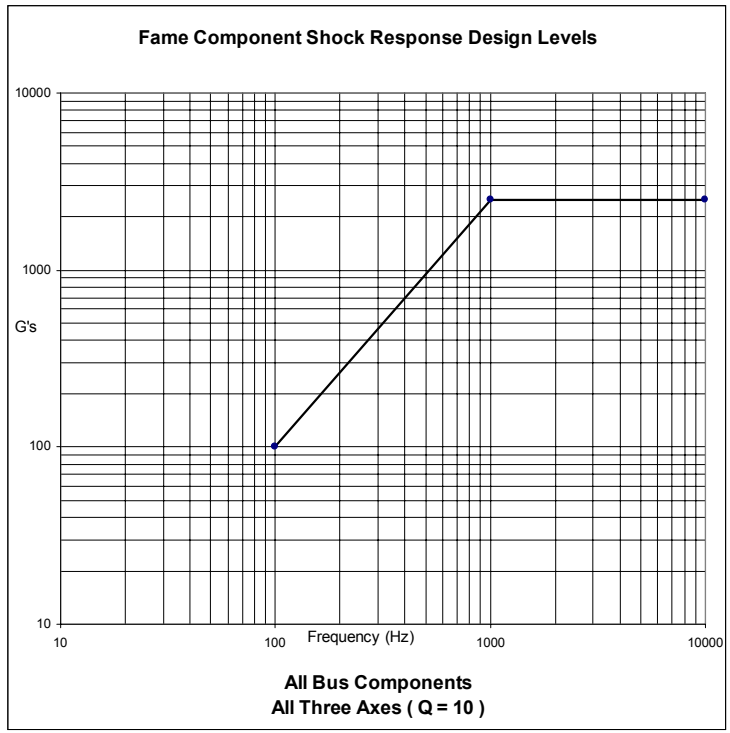

Design Environment
Shock Response Spectrum Levels

Frequency (Hz)	G's
100	100
1000	2500
10000	2500

Star Tracker Information

- 90 Degrees of Separation Between Star Tracker Vectors
- Star Tracker Power = 10 watts, Star Tracker Mass = 5.5 lbm + 1.5 lbm + 3.0 lbm = 10.0 lbm
- Operating Temperature Range = -30 to +55 degree C
- FOV = 20 by 20 degree, Earth/Moon Exclusion = 60 by 60 degree, Sun Exclusion 90 by 90 degree
- Mass Will be Budgeted on the Spacecraft Bus Side of the Interface

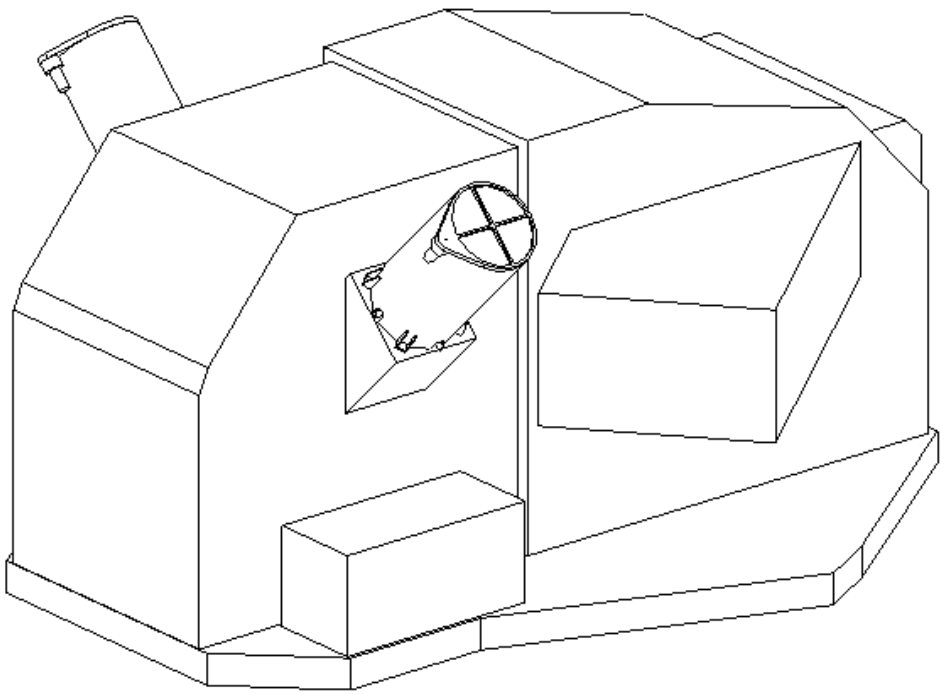

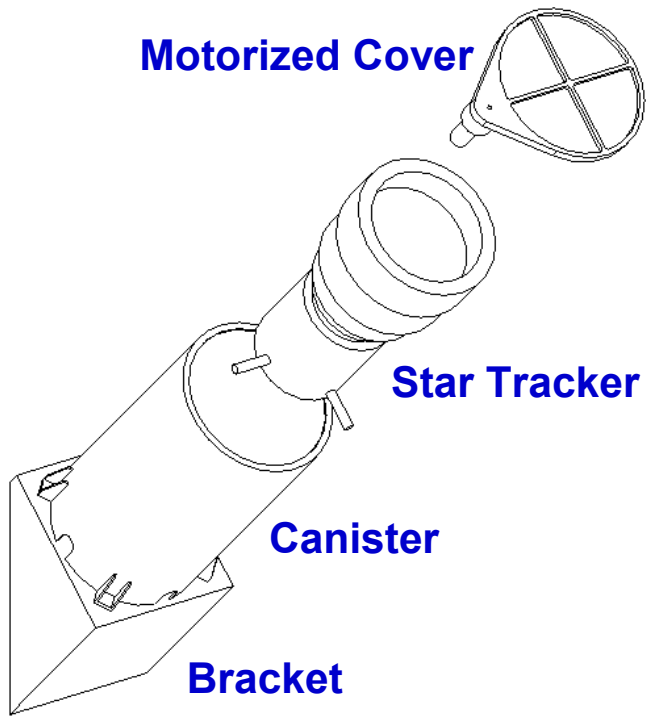

Omni Antenna Information

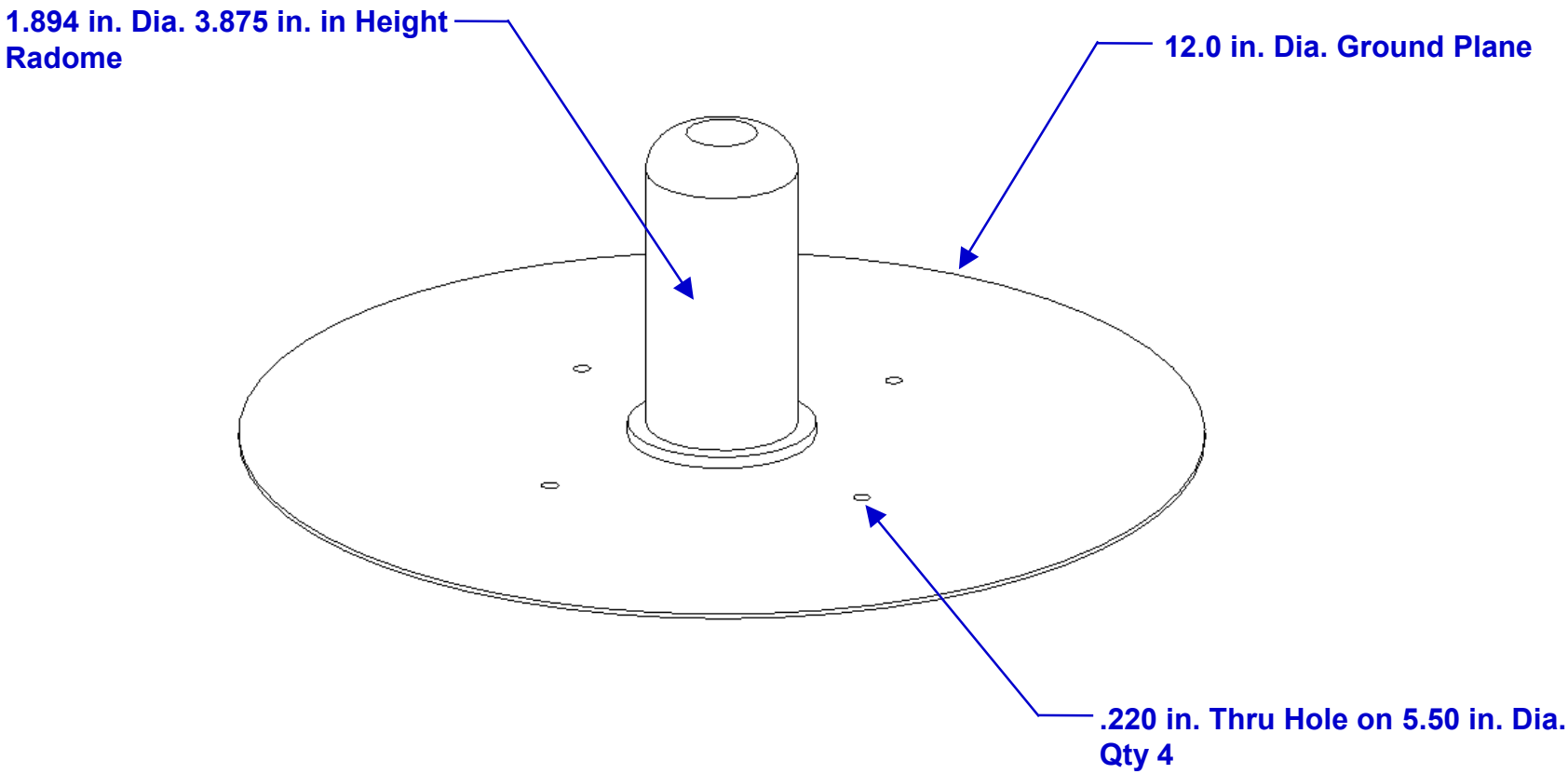

Spacecraft Coordinate System Definition

- **Coordinate System Origin At Station Location 0.0**

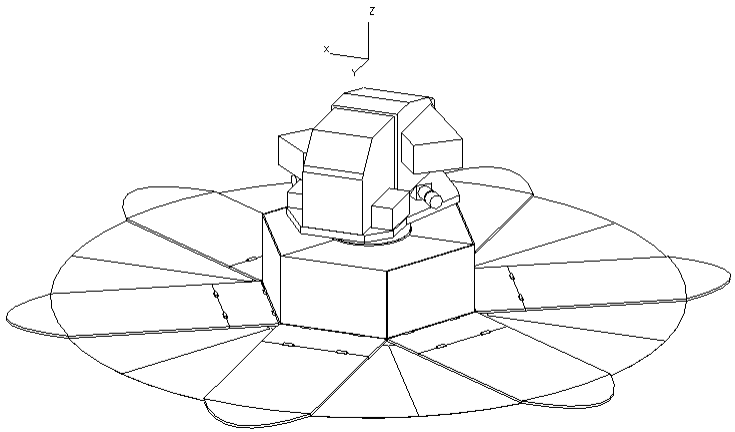

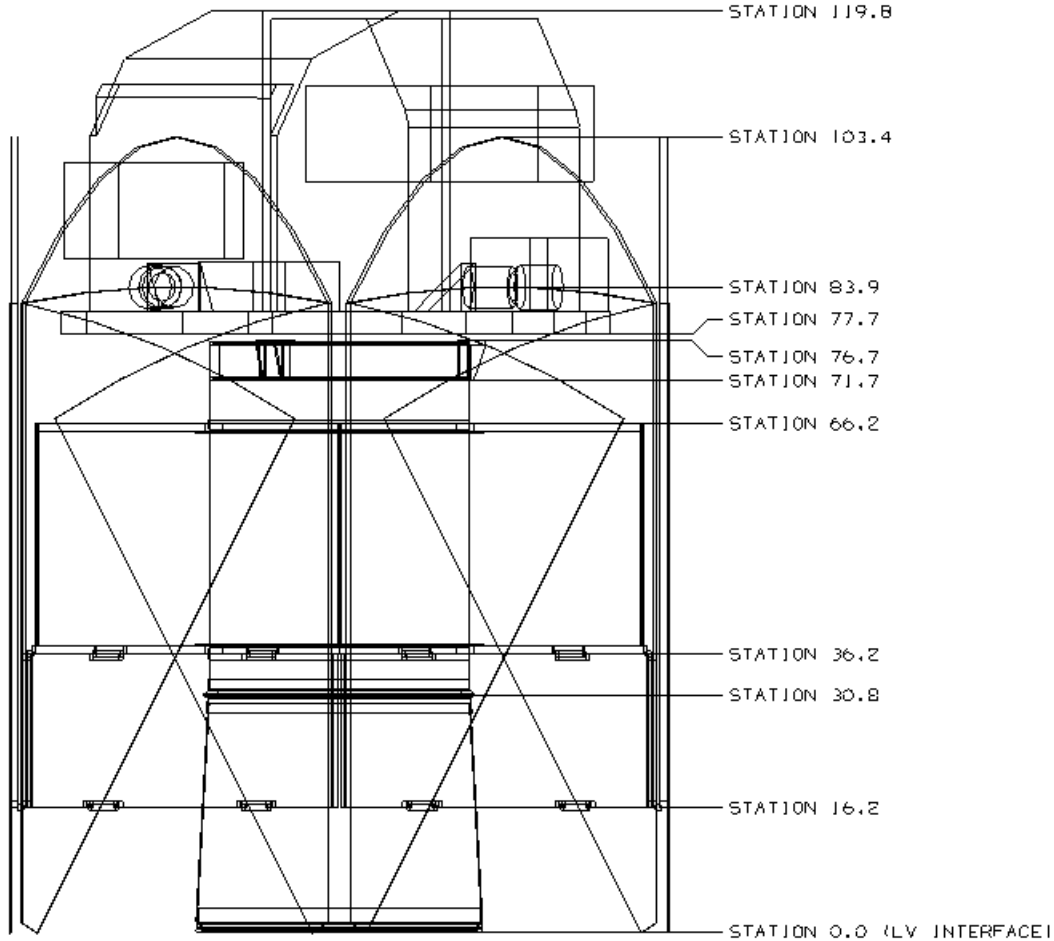

Instrument to Spacecraft Bus Interface

- **The Details of the Bolted Interface is a Function of the Instrument to Spacecraft Bus Alignment Requirement Obtained from the Overall Alignment Error Budget**

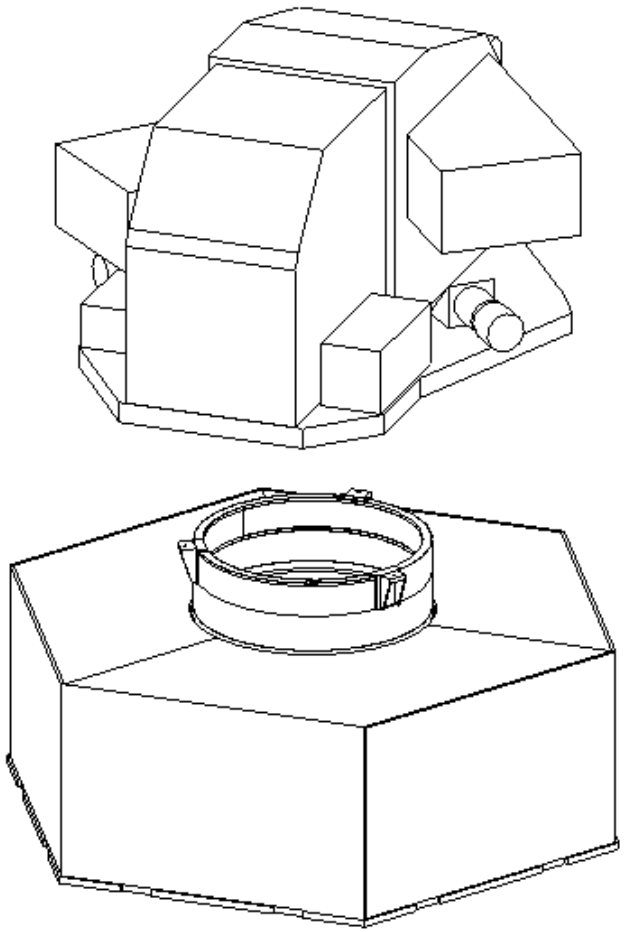

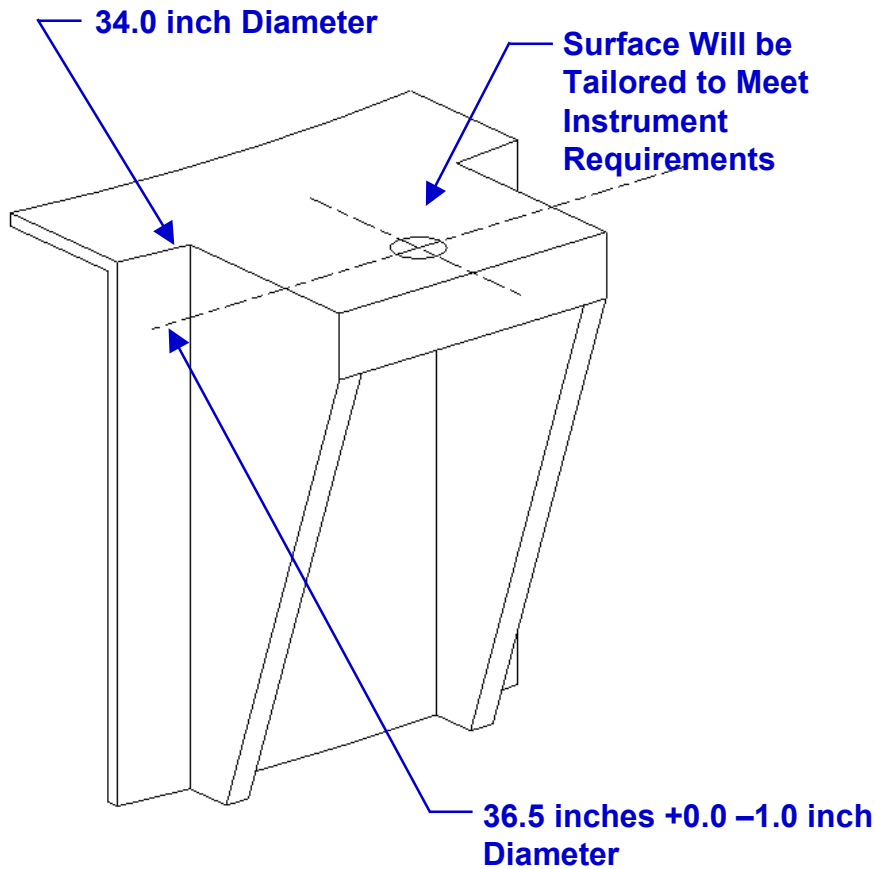

* **The Mounting Surface Pattern Can be Clocked any Orientation About the Thrust Tube**

Mass Properties

The Center of Mass and Inertia Requirements of the Deployed Spacecraft from the ACS Subsystem are:

Izz (spin axis)	= 380 to 420 kg * m^2
Ixx	= (0.89 to 0.91) * Izz
Iyy	= (0.89 to 0.91) * Izz
Ixy	= 0 to 4 kg * m^2
Ixz	= 0.5 kg * m^2
Iyz	= 0.5 kg * m^2
Xcg	= 0 to 5 mm
Ycg	= 0 to 5 mm
Zcg	= 0 to 2.5 mm

Spacecraft Bus Mechanical Requirement Table (1 of 5)

System - Subsytem	Category	Item	Requirement	Description
SC Bus - ACS	NA	Spin Rate	40 minutes ± 2 minutes	
	NA	Spin Rate Variation	± 54 marcsec/sec	
	NA	Spin Rate Knowledge	40 arcsec (1 sigma)	
	NA	Precession Angle	45 degrees ± 5 degrees	
	NA	Precession Rate	20 days ± 2 days	
	NA	Precession Rate Variation	± 600 marcsec/sec	
	NA	Precession Angle Knowledge	10 arcsec (1 sigma)	
	NA	Nutation Angle	± 10 arcsec	
	NA	Nutation Knowledge		
	NA	Inertial Attitude Knowledge		
	NA	Transverse Rate Knowledge		
	NA	Maximum Jitter		
	Operational Modes	Standby Mode, Data Collection		
	Operational Modes	Inertial Pointing Mode		
	Operational Modes	Sun Pointing Mode		
	Operational Modes	Safe-Hold Mode		
	Operational Modes	Open-Loop Burn Mode		
	Operational Modes	Active Nutation Control Mode		
	Operational Modes	Spin Axis Precession Mode		
	NA	Maximum Mass Allocation		
	Stowed Configuration	Maximum Power Allocation		
	Deployed Configuration	Maximum Power Allocation		

Spacecraft Bus Mechanical Requirement Table (2 of 5)

System - Subsytem	Category	Item	Requirement	Description
SC Bus - RCS	NA	Spacecraft Attitude Control	3 Axis	
	NA	Spacecraft Delta Velocity	TBD m/s	
	NA	Maximum Delta Velocity Manuever Time	TBD sec	
	NA	Spacecraft Pitch Rate	TBD degree/sec	
	NA	Spacecraft Yaw Rate	TBD degree/sec	
	NA	Spacecraft Roll Rate	TBD degree/sec	
	NA	Thruster Control Authority Margin	25%	
	NA	Simultaneous Thruster Firings	4	
	NA	Mechanical Faults to Activation	2	
	NA	Electrical Faults to Activation	3	
	NA	Adiabatic Detonation	None	
	Stowed Configuration	Maximum Water Hammer Surge Press	700 psi	
	NA	Maximum Dry Mass Allocation	50 kg	
	NA	Maximum Propellant Mass	75 kg	
	NA	Static Acceleration	As Stated in NCST-X-FMXXX	
	NA	Vibration	As Stated in NCST-X-FMXXX	
	NA	Shock	As Stated in NCST-X-FMXXX	
	Thrusters	Temperature Range	5 to 40 degree C	
	Thrusters	Maximum Pulses	20,000	
	Thrusters	Minimum Impulse Bit	.004 N*sec	
	Thrusters	Thruster Level	.2 to 5 N	
	Thrusters	Burn Duration	10 ms to 30 minutes	
	Thrusters	Cold Starts	0	
	Thrusters	Alignment	0.5 degree	
	Thrusters	Total Impulse per Thruster	10,000 lb*sec	
	NA	Factors of Safety	2.5 to 1	
	NA	Tank Design	MIL-STD-1522	
	NA	Propellant Lateral Center of Mass	.5 cm	
	NA	Cleanliness	MIL-STD-1246 Level 100A	
	NA	Maximum Power	TBD watts	
	NA	Valve Leakage per Seat	< 1E10^-5 scc/sec He	
	NA	Plume Contamination	TBD	
	Solid Rocket Motor	Alignment	1.0 degree	
	Solid Rocket Motor	Interface Temperature	TBD degree C	
	Solid Rocket Motor	Delta Velocity	TBD m/sec	
	Solid Rocket Motor	Total Mass	TBD kg	
	Solid Rocket Motor	Case Leakage	< 1E10^-4 scc/sec He	
	Solid Rocket Motor	Maximum Acceleration	TBD g's	
	Solid Rocket Motor	Maximum Offload	20%	
	Solid Rocket Motor	Maximum Spin Rate	60 RPM	
	Solid Rocket Motor	Minimum Temperature	TBD degree C	
	Solid Rocket Motor	Maximum Temperature Gradient	TBD degree C	
	Solid Rocket Motor	Maximum Burn Time	TBD sec	
	Solid Rocket Motor	Static Balance	TBD oz*in	
	Solid Rocket Motor	Dynamic Balance	TBD oz*in^2	

Spacecraft Bus Mechanical Requirement Table (3 of 5)

System - Subsytem	Category	Item	Requirement	Description
SC Bus -	NA	Flight Vehicle Separation and Disconnect		
Mechanism	NA	Spacecraft Separation and Disconnect		
	NA	Solar Array Assy Deployment Angle		
	NA	Solar Array Assy Deployment Variation		
	NA	Array Arm Deployment Variation	Total .2 inch Flatness Across Entire Arm	
	NA	Maximum Jitter		
	Trim Tab	Quantity & Location	Six Total, One at End of Each Array Arm	
	Trim Tab	Degrees of Freedom	One DOF, Pitching Up and Down	
	Trim Tab	Flatness	5 mm for 2 meters in Length	
	Trim Tab	Maximum Angle Travel	± 45 degrees	
	Trim Tab	Minimum Angular Increment	0.02 degree	
	Trim Tab	Minimum Surface Area	0.2 m^2, 0.5 m by 0.4 m	
	Trim Tab	Optical / Surface Properties	$\alpha < 0.15$ & Cs > Cd	
	Trim Tab	Thermal Radiation	Delta T $\leq$ TBD degree C, Delta $\leq$ TBD%	
	Trim Masses	Quantity and Location for Center of Mass	Three Total, Parallel to x, y, and z Axes	
	Trim Masses	Quantity and Location for Moments of Inertia	Two Total, 45 degree in xz and yz Planes	
	Trim Masses	Minimum Mass	10 kg for CG and two 10 kg for Inertias	
	Trim Masses	Minimum Range of Motion	1.0 meter	
	Trim Masses	Minimum Step Increment	TBD	
	NA	Maximum Mass Allocation		
	NA	Star Tracker Contamination Door		

Spacecraft Bus Mechanical Requirement Table (4 of 5)

System - Subsytem	Category	Item	Requirement	Description
SC Bus -	Temperature	Component Operational	-10 to 40 degree C	
Thermal	Temperature	Component Non-Operational	-20 to 50 degree C	
	Temperature	Maximum Thermal Gradients	TBD	
	Instrument	Operational Interface Temperature	18 to 22 degree C	
	Instrument	Non-Operational Interface Temperature	TBD	
	Instrument	Interface Conduction	TBD	
	Instrument	Interface Radiation	TBD	
	Environmental	Solar Flux	415 to 444 BTU / (hr*ft^2)	
	Environmental	Earth IR	75 BTU / (hr*ft^2)	
	Environmental	Maximum Eclipse Duration	15 minutes	
	Launch	Pre-Launch Temperature	TBD	
	Launch	Temperature	TBD	
	Launch	Vent Rate	TBD	
	Power - Electronics	Operational	283 watts TBR	
	Power - Electronics	Survival	155 watts TBR	
	Power - Electronics	Launch Sequence	60 watts TBR	
	Power - Heater	Operational	24 watts TBR	
	Power - Heater	Survival	91 watts TBR	
	Power - Heater	Launch Sequence	0 watts TBR	
	Parts & Materials	Optical Properties BOL	TBR	
	Parts & Materials	Optical Properties EOL	TBR	
	Parts & Materials	Outgassing	NASA Spec	
	Parts & Materials	Grounding	MLI 50 ohms or less, Ag Teflon TBD	
	Parts & Materials	Attachments	TBD	
	NA	Maximum Mass Allocation	TBD	
	NA	Maximum Jitter	TBD	

Spacecraft Bus Mechanical Requirement Table (5 of 5)

System - Subsytem	Category	Item	Requirement	Description
SC Bus -	NA	Coordinate System	As Stated in NCST-X-FMXXX	
Mechanical	NA	Non-Operational Envelope	As Stated in NCST-X-FMXXX	
	NA	Operational Envelope	As Stated in NCST-X-FMXXX	
	NA	Launch Vehicle Interface		
	NA	Instrument Instrument Interface		
	ACS Sensor Location	Star Trackers		
	ACS Sensor Location	Sun Sensor		
	NA	RF Antenna Location		
	Solar Array Area	Stowed Configuration	864 in^2 per Array Arm	
	Solar Array Area	Deployed Configuration	605 in^2 per Array Arm	
	Mass Properties	Flight Vehicle Mass Allocation		
	Mass Properties	Center of Mass Lateral Location	5.0 mm	
	Mass Properties	Center of Mass Axial Location	2.5 mm	
	Mass Properties	Moment of Inertia Izz	$380 \leq Izz \leq 420$ kg*m^2	
	Mass Properties	Moment of Inertia Ixx	$0.89*Izz \leq Ixx \leq 0.91*Izz$	
	Mass Properties	Moment of Inertia Iyy	$0.89*Izz \leq Iyy \leq 0.91*Izz$	
	Mass Properties	Product of Inertia Ixz and Iyz	X.X degree Spin Balance	
	Mass Properties	Product of Inertia Ixy	≤ 4 kg*m^2	
	Mass Properties	Mass Properties Report		
	NA	Design Limit Loads	As Stated in NCST-X-FMXXX	
	NA	Minimum Flight Vehicle Natural Frequency	As Stated in NCST-X-FMXXX	
	NA	Verified Finite Element Model	As Stated in NCST-X-FMXXX	
	NA	Maximum Jitter		
	NA	Factors of Safety	As Stated in NCST-X-FMXXX	
	NA	Outgassing	As Stated in NCST-X-FMXXX	
	NA	Parts, Materials, and Processes	As Stated in NCST-X-FMXXX	
	NA	Magnetic Dipole	100 Pole - cm	

Spacecraft Mass Properties Summary (1 of 3)

FAME MASS PROPERTIES REPORT (SI Units)

August 1, 2000

SUBSYSTEM COMPONENT	QTY		TOTAL MASS (kg)	UNCERT MASS (%)	MASS (kg)	CENTER OF GRAVITY X cg (m)	Y cg (m)	Z cg (m)	INERTIA ABOUT COMP CG Ixx (kg*m^2)	Iyy (kg*m^2)	Izz (kg*m^2)	COMMENTS
TOTAL SPACECRAFT (STOWED IN LV)			1036.79	NA	NA	0.0	0.0	0.5	NA	NA	NA	
TOTAL SPACECRAFT (DEPLOYED)			561.66	NA	NA	0.0	0.0	0.9	446	437	361	
INSTRUMENT SUBSYSTEM			229.20	NA	NA	0.0	0.1	1.4	38	26	43	
INSTRUMENT ASSY	1	x	229.20	20%	191.00	0.0	0.1	1.4	38.4	26.4	42.5	LOCKHEED MARTIN
	1	x	0.00	0%	0.00	0.0	0.0	0.0	0.0	0.0	0.0	
STRUCTURAL SUBSYSTEM			90.79	NA	NA	0.0	0.0	0.5	37	37	40	
BUS THRUST TUBE	1	x	25.35	10%	23.05	0.0	0.0	0.5	6.4	6.4	5.1	CALCULATED
INSTRUMENT INTERFACE DECK	1	x	5.24	10%	4.76	0.0	0.0	1.1	1.3	1.3	2.7	CLEMENTINE, SCALED
ELECTRONICS DECK	1	x	6.24	10%	5.67	0.0	0.0	0.1	2.0	2.0	4.1	CLEMENTINE, SCALED
ENCLOSURE PANELS	6	x	13.46	10%	2.04	0.0	0.0	0.6	7.8	7.8	13.8	CLEMENTINE, SCALED
INSTRUMENT SUPPORT PANELS	3	x	11.22	10%	3.40	0.0	0.0	0.7	3.5	3.5	5.7	CLEMENTINE, SCALED
LONGERONS	6	x	5.08	10%	0.77	0.0	0.0	0.6	3.9	3.9	0.7	CLEMENTINE, SCALED
DECK ANGLES	12	x	3.89	10%	0.29	0.0	0.0	0.6	3.0	3.0	4.3	CLEMENTINE, SCALED
THRUSTER BRACKETS	8	x	0.60	10%	0.07	0.0	0.0	0.6	0.6	0.3	0.6	CLEMENTINE, SCALED
OMNI ANTENNA SUPPORT ARM	1	x	0.65	10%	0.59	0.8	0.4	0.1	0.0	0.0	0.0	CLEMENTINE, SCALED
MISCELLANEOUS HARDWARE	1	x	5.44	20%	4.54	0.0	0.0	0.6	0.0	0.0	0.0	ESTIMATED
BALANCE MASS	1	x	13.61	20%	11.34	0.0	0.0	0.1	2.9	2.9	2.9	ESTIMATED
	1	x	0.00	0%	0.00	0.0	0.0	0.0	0.0	0.0	0.0	
RCS SUBSYSTEM			72.77	NA	NA	0.0	0.0	0.8	5	4	4	
PROPELLANT TANK	1	x	8.98	10%	8.16	0.0	0.0	0.8	0.0	0.0	0.0	CLEMENTINE, SCALED
PROPELLANT	1	x	49.89	25%	39.92	0.0	0.0	0.8	1.2	1.2	1.2	CALCULATED
PRESSURE TRANSDUCER	1	x	0.75	10%	0.68	0.0	0.0	0.6	0.0	0.0	0.0	CLEMENTINE, SCALED
VALVES	1	x	2.00	10%	1.81	0.0	0.0	0.6	0.0	0.0	0.0	CLEMENTINE, SCALED
THRUSTERS	8	x	2.86	5%	0.34	0.0	0.0	0.6	2.5	1.8	2.8	CLEMENTINE
SAFE / ARM CONTROLLER	1	x	2.86	5%	2.72	0.0	0.0	0.6	0.0	0.0	0.0	CLEMENTINE
MISCELLANEOUS HARDWARE	1	x	5.44	20%	4.54	0.0	0.0	0.4	0.0	0.0	0.0	ESTIMATED
	1	x	0.00	0%	0.00	0.0	0.0	0.0	0.0	0.0	0.0	

Spacecraft Mass Properties Summary (2 of 3)

FAME MASS PROPERTIES REPORT (SI Units)

August 1, 2000

SUBSYSTEM COMPONENT	QTY		TOTAL MASS (kg)	UNCERT MASS (%)	MASS (kg)	CENTER OF GRAVITY X cg (m)	Y cg (m)	Z cg (m)	INERTIA ABOUT COMP CG Ixx (kg*m^2)	Iyy (kg*m^2)	Izz (kg*m^2)	COMMENTS
ADCS SUBSYSTEM			**16.13**	**NA**	**NA**	**-0.1**	**-0.1**	**0.9**	**6**	**6**	**2**	
IMU	2	x	1.57	5%	0.75	0.0	0.0	0.6	0.0	0.0	0.0	CLEMENTINE
SUN SENSOR	4	x	1.63	20%	0.34	0.0	0.0	0.6	0.0	0.0	0.0	FAME-98 MANIFEST
SUN SENSOR ELECTRONICS	1	x	1.36	20%	1.13	0.0	0.0	0.6	0.0	0.0	0.0	FAME-98 MANIFEST
STAR TRACKERS	2	x	6.67	5%	3.18	0.0	0.0	1.5	0.0	0.0	0.0	CT-633
PASSIVE NUTATION DAMPER	1	x	3.27	20%	2.72	-0.6	-0.4	0.1	0.0	0.0	0.0	ESTIMATED
MISCELLANEOUS HARDWARE	1	x	1.63	20%	1.36	0.0	0.0	0.4	0.0	0.0	0.0	ESTIMATED
	1	x	0.00	0%	0.00	0.0	0.0	0.0	0.0	0.0	0.0	
MECHANISM SUBSYSTEM			**53.39**	**NA**	**NA**	**0.0**	**0.0**	**0.4**	**79**	**73**	**129**	
LAUNCH SEPARATION SYSTEM	1	x	2.25	10%	2.04	0.0	0.0	0.0	0.0	0.0	0.0	CLEMENTINE, SCALED
AKM SEPARATION SYSTEM	1	x	2.25	10%	2.04	0.0	0.0	0.0	0.0	0.0	0.0	CLEMENTINE, SCALED
SOLAR ARRAY RELEASE SYSTEM	6	x	2.99	10%	0.45	0.0	0.0	0.6	0.0	0.0	0.0	CLEMENTINE, SCALED
OMNI ANTENNA RELEASE SYSTEM	1	x	0.30	10%	0.27	0.5	0.0	0.1	0.0	0.0	0.0	CLEMENTINE, SCALED
SUN SHIELD RELEASE SYSTEM	6	x	1.78	10%	0.27	0.0	0.0	0.6	0.0	0.0	0.0	CLEMENTINE, SCALED
SUN SHIELD (DEPLOYED)	6	x	8.16	20%	1.13	0.0	0.0	0.1	18.4	18.4	36.9	ESTIMATED
CENTER-OF-MASS TRIM MECHANISM	3	x	14.97	10%	4.54	0.0	0.0	0.8	2.3	2.3	0.4	CALCULATED
SUN SHIELD TRIM MECHANISM	6	x	10.48	10%	1.59	0.0	0.0	0.1	44.9	44.9	89.9	CALCULATED
ORDNANCE CONTROL UNIT	1	x	3.25	5%	3.10	0.6	0.4	0.2	0.0	0.0	0.0	CLEMENTINE
ORDNANCE HARNESS	1	x	1.25	10%	1.13	0.0	0.0	0.4	0.0	0.0	0.0	CLEMENTINE, SCALED
SOLAR ARRAY HINGES	6	x	2.99	10%	0.45	0.0	0.0	0.4	0.0	0.0	0.0	CLEMENTINE, SCALED
MISCELLANEOUS HARDWARE	1	x	2.72	20%	2.27	0.0	0.0	0.4	0.0	0.0	0.0	ESTIMATED
	1	x	0.00	0%	0.00	0.0	0.0	0.0	0.0	0.0	0.0	
EPS SUBSYSTEM			**53.27**	**NA**	**NA**	**0.3**	**-0.2**	**0.2**	**69**	**65**	**137**	
SOLAR ARRAY (DEPLOYED)	6	x	25.45	10%	3.86	0.0	0.0	0.1	57.2	57.2	114.4	CLEMENTINE, SCALED
PCDU	1	x	5.99	10%	5.44	0.0	-0.8	0.2	0.1	0.1	0.1	CLEMENTINE, SCALED
SPV BATTERY (NIH^2)	1	x	20.21	10%	18.37	0.7	-0.3	0.3	0.2	0.1	0.2	CLEMENTINE, SCALED - 30A-HR NIH4
MISCELLANEOUS HARDWARE	1	x	1.63	20%	1.36	0.0	0.0	0.4	0.0	0.0	0.0	ESTIMATED
	1	x	0.00	0%	0.00	0.0	0.0	0.0	0.0	0.0	0.0	

Spacecraft Mass Properties Summary (3 of 3)

FAME MASS PROPERTIES REPORT (SI Units)

August 1, 2000

SUBSYSTEM COMPONENT	QTY		TOTAL MASS (kg)	UNCERT MASS (%)	MASS (kg)	CENTER OF GRAVITY X cg (m)	Y cg (m)	Z cg (m)	INERTIA ABOUT COMP CG Ixx (kg*m^2)	Iyy (kg*m^2)	Izz (kg*m^2)	COMMENTS
COMMUNICATION SUBSYSTEM			**17.29**	**NA**	**NA**	**-0.3**	**0.2**	**0.3**	**1**	**2**	**7**	
TRANSPONDER	2	x	8.00	5%	3.81	-0.6	0.3	0.2	0.1	0.1	0.2	CLEMENTINE
DIPLEXER	2	x	1.32	5%	0.63	-0.5	0.6	0.2	0.0	0.0	0.0	CLEMENTINE
HYBRID / COUPLER	4	x	0.08	5%	0.02	0.0	0.0	0.6	0.0	0.0	0.0	CLEMENTINE
OMNI ANTENNA	3	x	2.25	10%	0.68	0.0	0.0	0.4	0.0	0.0	0.0	CLEMENTINE, SCALED
HIGH POWER AMP	2	x	3.11	5%	1.48	0.0	0.0	0.4	0.0	0.0	0.0	ICM
COAX CABLE	3	x	0.90	10%	0.27	0.0	0.0	0.4	0.0	0.0	0.0	CLEMENTINE, SCALED
MISCELLANEOUS HARDWARE	1	x	1.63	20%	1.36	0.0	0.0	0.4	0.0	0.0	0.0	ESTIMATED
	1	x	0.00	0%	0.00	0.0	0.0	0.0	0.0	0.0	0.0	
CT&DH SUBSYSTEM			**14.65**	**NA**	**NA**	**0.0**	**0.5**	**0.3**	**3**	**0**	**6**	
SC CONTROLLER	1	x	8.16	20%	6.80	0.0	0.8	0.3	0.1	0.1	0.1	ESTIMATED
CABLES	1	x	6.49	10%	5.90	0.0	0.0	0.4	0.0	0.0	0.0	CLEMENTINE, SCALED
	1	x	0.00	0%	0.00	0.0	0.0	0.0	0.0	0.0	0.0	
TCS SUBSYSTEM			**14.15**	**NA**	**NA**	**0.0**	**0.0**	**0.4**	**2**	**0**	**0**	
THERMAL BLANKETS	1	x	6.53	20%	5.44	0.0	0.0	0.4	0.0	0.0	0.0	ESTIMATED
MISCELLANEOUS HARDWARE	1	x	7.62	20%	6.35	0.0	0.0	0.4	0.0	0.0	0.0	ESTIMATED
	1	x	0.00	0%	0.00	0.0	0.0	0.0	0.0	0.0	0.0	
GEO TRANSFER HARDWARE			**475.14**	**NA**	**NA**	**0.0**	**0.0**	**0.0**	**51**	**51**	**35**	
LAUNCH VEHICLE ADAPTER	1	x	5.86	10%	5.33	0.0	0.0	-0.7	0.7	0.7	1.2	CALCULATED
AFT AKM ADAPTER	1	x	9.98	10%	9.07	0.0	0.0	-0.4	1.5	1.5	2.1	CALCULATED
FORWARD AKM ADAPTER	1	x	3.49	10%	3.18	0.0	0.0	0.0	0.4	0.4	0.7	CALCULATED
AKM	1	x	455.80	5%	434.10	0.0	0.0	0.0	43.6	43.6	31.0	CALCULATED
	1	x	0.00	0%	0.00	0.0	0.0	0.0	0.0	0.0	0.0	

Thermal Model Summary

Case Study	S/C Shear Panel	Radiator	AKM Cavity	S/A Sun Side	S/A Shade Side	Beta Cloth Sun Shield	Trim Tab Heater Power each tab	Trim Tab Sun Side	Trim Tab Shade Side
1. MLI on Shade Side of S/A *	-100C/-140C	-17C/+15	+91C/+15C	92C	-109C	-14C	250W	250C/50C	250C/50C
Black Trim Tabs w/o MLI on Shade Side		(see Note 1)	(see Note 1)					(see Note 2)	(see Note 2)
2. No MLI on Shade Side of S/A *	-56C/-68C	-17C/+15	+91C/+15C	41C	40C	-13C	270W	258C/58C	258C/58C
Black Trim Tabs w/o MLI on Shade Side		(see Note 1)	(see Note 1)					(see Note 2)	(see Note 2)
3. No MLI on Shade Side of S/A *	-59C/-69C	-17C/+15	+91C/+15C	41C	40C	-13C	170W	298C/98C	-35C/-113C
Black Trim Tabs with MLI on Shade Side		(see Note 1)	(see Note 1)					(see Note 2)	(see Note 2)
4. Same as Case 2 but with Silver Teflon *	-51C/-68C	-17C/+15	+91C/+15C	41C	40C	-13C	165W	209C/9C	209C/9C
Trim Tabs		(see Note 1)	(see Note 1)					(see Note 2)	(see Note 2)
5. Same as Case 3 but with Silver Teflon *	-53C/-69C	-17C/+15	+91C/+15C	41C	40C	-13C	85W	210C/10C	-60C/-137C
Trim Tabs		(see Note 1)	(see Note 1)					(see Note 2)	(see Note 2)
6. MLI on Shade Side of S/A. 25% Cell	-120C/-150C	-17C/+15	+91C/+15C	20C	-124C	-14C	85W	210C/10C	-60C/-148C
Coverage. Same trim tabs as case 5.		(see Note 1)	(see Note 1)					(see Note 2)	(see Note 2)
7. Same as case 6 but w/o MLI on shade	-83C/-103C	-17C/+15	+91C/+15C	-21C	-21C	-14C	85W	210C/10C	-60C/-143C
side of S/A.		(see Note 1)	(see Note 1)					(see Note 2)	(see Note 2)

Assumptions:

- **307 watts uniformly dissipated on electronics deck.**
- **Shear panels have Kapton MLI.**
- **AKM cavity is open.**
- **Trim tabs are 5”x10”x0.032” aluminum.**
- **Solar cells cover entire panel surface.**
- **Beta Cloth used as sun shield between solar panels.**

Note 1: First number is temperature of radiator - perfectly insulated from AKM cavity.
Second number is temperature of radiator - coupled to AKM cavity.
Note 2: First number is temperature when trim tab heater is ON.
Second number is temperature when trim tab heater is OFF.
*** Case assumes solar panel is totally populated with solar cells on sun side of panel.**