Spacecraft Bus Overview/Top Level Requirements

Mark Johnson
Program Manager
NRL
202-404-5328
johnson@ssdd.nrl.navy.mil

Spacecraft Bus Requirements

- Place Instrument in Proper Orbit
  - GTO → GEO Operations
- Provide Services for Instrument to Collect Science Data
  - Stable Attitude and Spin Rate
    - Most Difficult FAME Requirements
  - Power, Structure, Thermal, etc.
  - Processing to Initialize/Operate the Instrument
    - Provide Attitude/Spin Rate to Instrument for Acquisition
  - Data Collection
  - Transmission of Data to Ground System
- Provide Ability to "De-Orbit" Upon Completion of Mission

S/C Bus Error Budget Requirements (1 of 4)

Observing Parameters		
Instrument	Focal Length	15 m
	Aperture	0.56 m Along Scan
		0.13 m Cross Scan
	CCD	Operates in Time Delay Integration (TDI) Mmode
		4096 (along scan) x 2048 (Cross Scan) Pixels
		15 µm Square Pixels
		0.4 to 0.8 µm Response Range
		0.8 Quantum Efficiency
	Field of View	Two 1° FOV Separated by 84° (TBR) Along Scan
Spacecraft	Rotation Period	40 +/- 2 min
	Precession Period	20 +/- 2 days
	Sun Angle	45 +/- 5 deg
Catalog	Star Positions	0.5 µrad

S/C Bus Error Budget Requirements (2 of 4)

Astrometric Mission Requirements - Along Scan		
Rotation of Line of Sight (Modelable)	Solar Radation Torques	Combine to .26 µrad/sec in 300 sec
	Earthshine Torques	
	Solar Irradiance Variation	
Rotation of Line of Sight (Unmodelable)	Along Scan Jitter at 0.2 Hz	0.01 µrad Peak to Peak
	Along Scan Jitter at 1 Hz	0.001 µrad Peak to Peak
	Along Scan Jitter at 10 Hz	0.003 µrad Peak to Peak
	Along Scan Jitter at 100 Hz	0.01 µrad Peak to Peak
	Fuel Slosh	TBD
Tracking Between TDI and Star Image	Rotation Rate Determination	TBD
	TDI Rate Mismatch	TBD
	Oscillator Stability	TBD
	Optical Distortion	TBD (2000 µas)
Optical System Performance	Stray Light	TBD
	Optical Aberrations	TBD
	Chromatic Errors	TBD
CCD and Electronics	Charge Transfer Efficiency	0.999995
	QE Variations	TBD (560 µas)
	Charge Spreading	TBD
	CCD Dark Current	TBD
	Read Noise	TBD
	Amplifier Gain Linearity	TBD
	Amplifier Gain Stability	TBD
Velocity Aberration Correction	Spacecraft Velocity Knowledge	1 cm / sec
	Time Knowledge on Board	1 msec
Spacecraft Position	Position Knowledge (Not Real Time)	165 m

S/C Bus Error Budget Requirements (3 of 4)

Astrometric Mission Requirements - Cross Scan		
Cross Scan Motion of Line of Sight (Modelable)	Solar Precession Torque	4 µrad in 1.56 sec
	Gravity Gradient Torque	Combine to 5 µrad in 1.56 sec
	Magnetic Torque	
	Solar Pressure Variation	
Cross Scan Motion of Line of Sight (Unmodelable)	Cross Scan Jitter At 0.2 Hz	0.1 µrad Peak to Peak
	Cross Scan Jitter At 1 Hz	0.025 µrad Peak to Peak
	Cross Scan Jitter At 10 Hz	0.03 µrad Peak to Peak
	Cross Scan Jitter At 100 Hz	0.1 µrad Peak to Peak
	Fuel Slosh	TBD
Alignment of CCD to Spin Axis (2 µrad in 1.56 sec)	CCD to FPA	TBD
	FPA to Spin Axis	150 µrad
Acquisition Window Center Relative to Star Image	Input Catalog	0.5 µrad
	Optical Distortion	TBD
	On-Board Star Image Centering	TBD
	On-Board Attitude Prediction	TBD
	Optical Distortion	TBD
	Optical Aberrations	TBD
	Chromatic Effects	TBD

S/C Bus Error Budget Requirements (4 of 4)

Acquisition Mode		
Location of Instrument Acquisition Window Based on Star Tracker Data	Star Tracker Accuracy	Combine to 50 µrad
	Attitude Prediction Accuracy	
	CCD Location Accuracy	TBD
	Star Tracker to Instrument Boreslght	TBD

Spacecraft Block Diagram

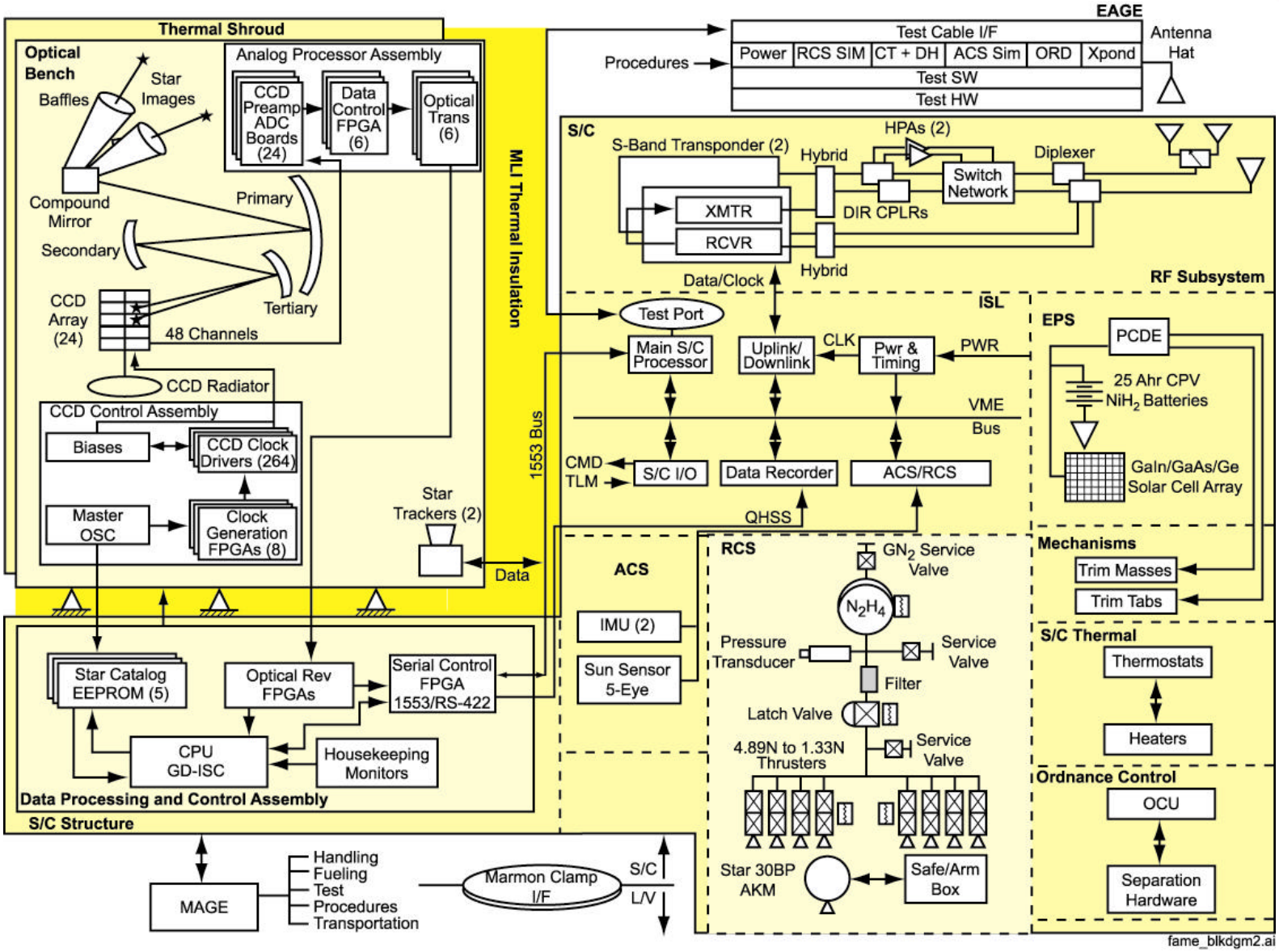
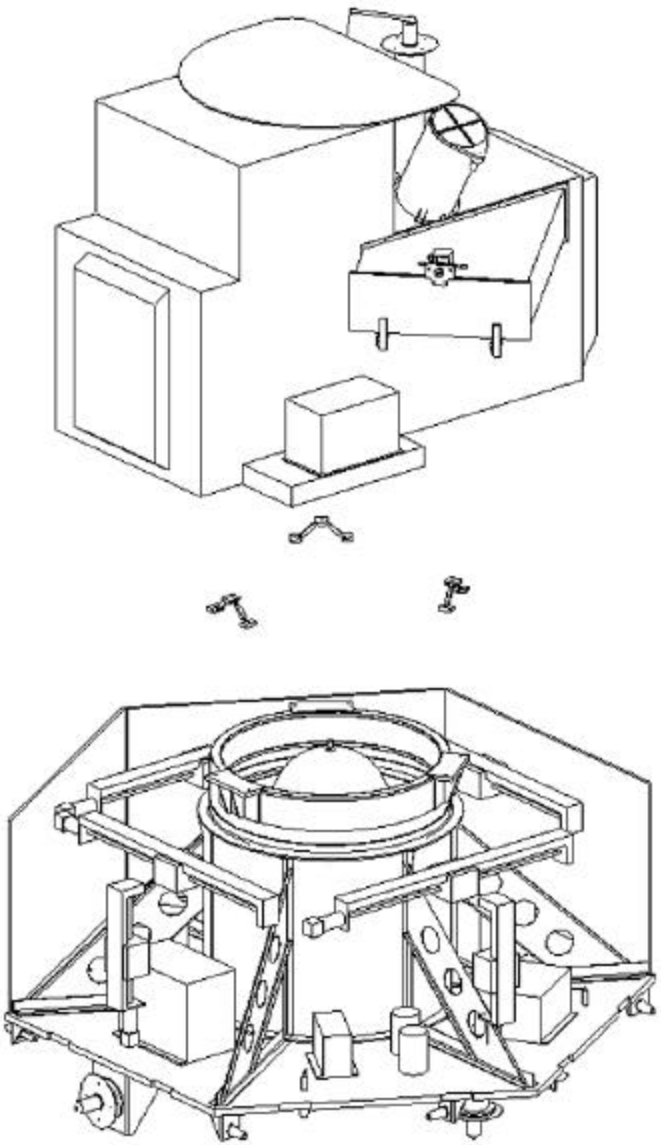
Spacecraft Bus Exploded View