Command, Telemetry & Data Handling System

Kenny Clark

NRL

202-767-0162

kclark@ssdd.nrl.navy.mil

Top-Level Functional Requirements

- Uplink Deformatting and Decoding (CCSDS, No Encryption)
- Downlink Formatting and Encoding (CCSDS, No Encryption)
- Telemetry Gathering
- Command Processing
- Instrument Control
- Attitude Determination and Control Processing and Commanding
- Mission Data Buffering
- Time Distribution

Top-Level Mission Requirements

- Class B Parts Screening
- Radiation Tolerance: 12.5 Krads (5 Years At FAME Orbit)
- Meet EMI Requirements
- Survive Launch Environment
- Power < 24 Watts
- Mass < M pounds
- Input Operating Voltage: 30 +/- 6 Vdc
- Fully Redundant
- Mean Mission Duration: 2.5 years
- Extended Mission Life: 5 years
- Operating Temperature Range: 0 to 40 C
- Survival Temperature Range: -20 to 60 C

Interface Requirements

- Instrument Interface
  - QHSS Mission Data
- ADCS
  - TBD Thrusters
  - TBD Paraffin Actuators
  - TBD Latch Valves
- Spacecraft Interfaces
  - 1553 Bus
  - TBD Passive Analog Channels
  - TBD Active Analog Channels
  - TBD Bi-levels
  - TBD Hi-level Relay Drivers
  - TBD Open-Collecter Drivers
- Uplink/downlink
  - 2 Kbps Uplink
  - Up to 409.6 Kbps Downlink

Current Baseline/Approach

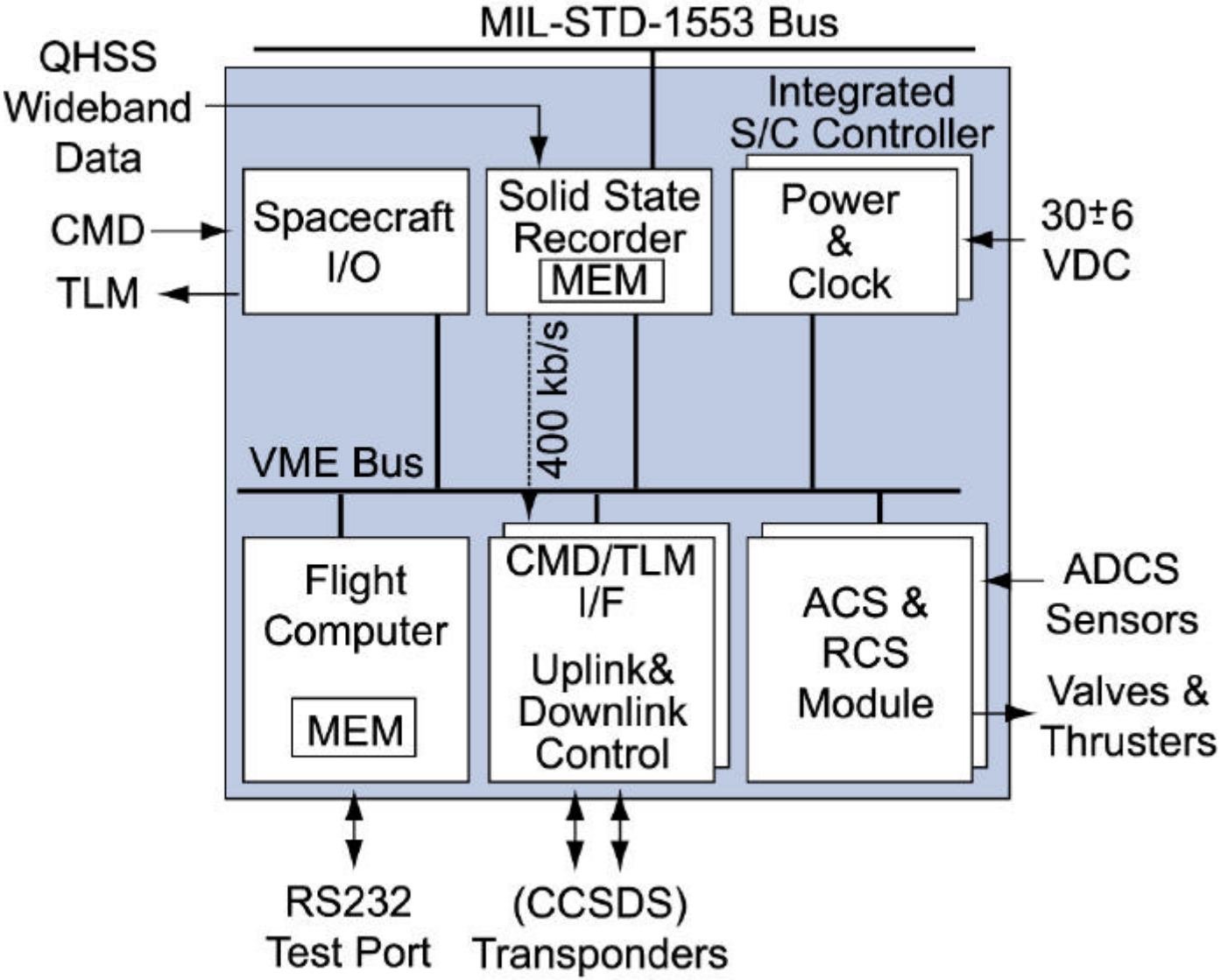

Trade Studies

- Single vs. Distributed Processing
  - Single High Performance Processor Performing All On-board Processing Tasks
  - Distributed Processing Among Multiple Processors
- Processor Choices
  - 8051
  - Rad6000
  - PowerPC
  - RHC-3000
  - Temic DSP-21020
- Oscillator Choice
  - Simple Oscillator
  - Temperature Compensation
  - Oven-Controlled Oscillator

Issues

- **Timing Distribution Requirements**

Top Level Schedule

- Requirements Definition: 9/00 - 11/00
- Preliminary Design: 11/00 - 5/01
- Begin Flight Processor Procurement (If Necessary): 5/01
- Breadboard Build: 3//01 - 8/01
- Engineering Model Build: 8/01 - 5/02
- Flight Unit Build: 5/02 - 12/02
- Flight Unit Test: 12/02 - 2/03
- Flight Unit Delivered to Spacecraft: 3/03