Structures

Ron Mader
Lead Mechanical Design Engineer
NRL
202-404-3470
rmader@space.nrl.navy.mil

Top Level Requirements (1 of 2)

- Requirements
  - Spacecraft Envelope, in the Stowed Configuration, Must Comply With 9.5 ft Diameter Delta II Fairing
  - Structure Must Be Capable of Surviving All Loads for All Environments: Manufacturing, Transportation, Testing, Launch, and On-Orbit
  - During Operational Configuration, Shade Instrument at 45+-5 Degrees Relative to the Sun
  - Interface With Third Stage of Delta II Launch Vehicle
  - Interface With Instrument
  - Inertia Ratio of TBD During Operational Configuration
  - Static and Dynamic Unbalance During Operational Configuration
  - Static and Dynamic Unbalance During Stowed Configuration for the AKM Burn
  - C.G. Station Location During Operational Configuration
  - Solar Array Area for Both Stowed and Deployed Configurations
  - Test Verified Finite Element Model for Delta Program Office
  - Low Jitter Platform of TBD for Instrument
  - Electrical Ground to Structure for All Electronic Components

Top Level Requirements (2 of 2)

- **Derived Requirements**
  - **Position all Electronics Components on One Electronics Deck With Sufficient Radiator Surface Area**
  - **Position Star Trackers to Provide Adequate Filed of View During Both Stowed and Deployed Configurations**
  - **Position the ACS Trim Tabs to Provide Adequate Control During Operational Configuration**
  - **Position the ACS Thrusters to Provide Adequate Control During Stowed and Deployed Configurations**
  - **Position the Omni Antennas to Provide Full Coverage During Stowed and Deployed Configurations**
  - **Position the RCS AKM Motor to Provide Delta V During Stowed Configuration**
  - **Design to Budget and Schedule**

Current Baseline/Approach (1 of 6)

- **Concept Study Report (CSR) Design**

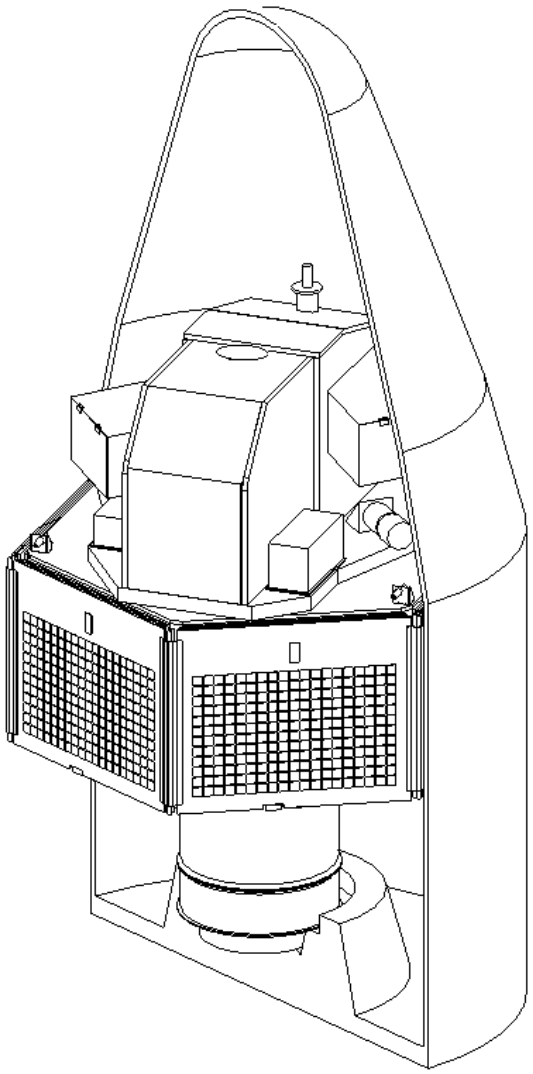

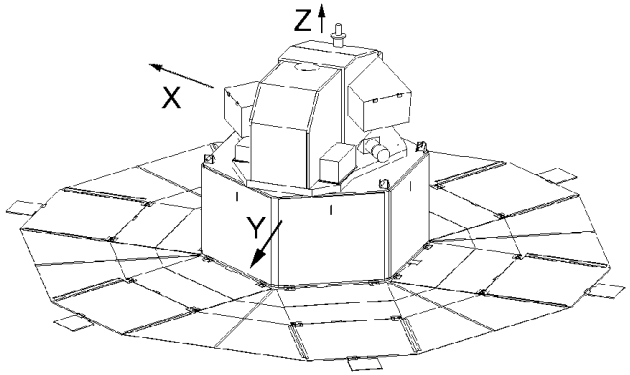

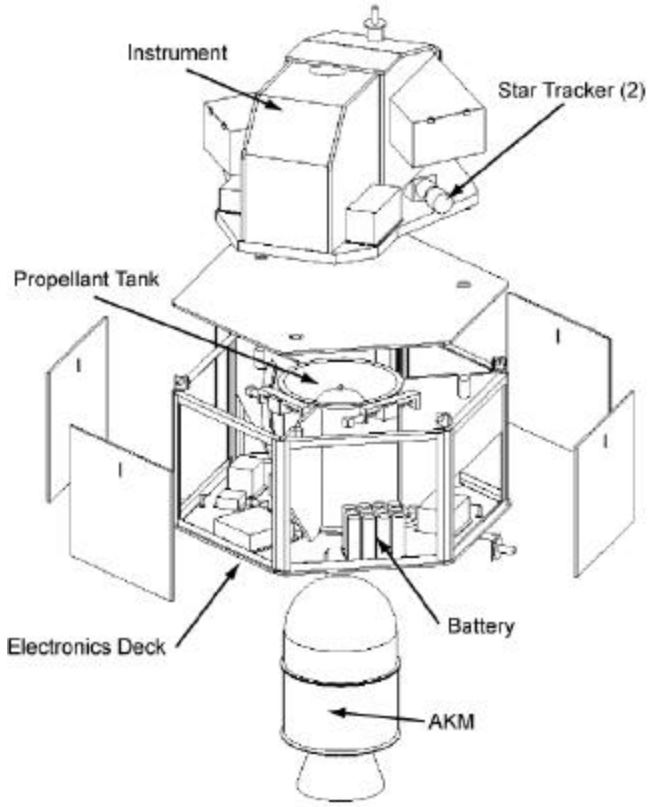

Current Baseline/Approach (2 of 6)

- **Concept Study Report (CSR) Design**
  - **Mass Properties (1 of 3)**

SUBSYSTEM COMPONENT	TOT QTY	TOTAL MASS (kg)	UNCERT MASS (kg)	UNCERT MASS (%)	TOT UNIT MASS (kg)	UNIT MASS (kg)	CENTER OF GRAVITY X cg (m)	Y cg (m)	Z cg (m)	INERTIA ABOUT COMP CG Ixx (kg*m^2)	Iyy (kg*m^2)	Izz (kg*m^2)	COMMENTS
STOWED SPACECRAFT		**1031.09**	**100.92**	**NA**	**930.17**	**NA**	**0.3**	**0.4**	**14.2**	**NA**	**NA**	**NA**	
INSTRUMENT SUBSYSTEM		**229.20**	**38.20**	**NA**	**191.00**	**NA**	**-1.6**	**2.9**	**55.6**	**131,072**	**90,130**	**145,274**	
INSTRUMENT ASSY	1	229.20	38.20	20%	191.00	191.00	-1.6	2.9	55.6	131,072	90,130	145,274	LOCKHEED MARTIN
STRUCTURAL SUBSYSTEM		**109.47**	**11.40**	**NA**	**98.08**	**NA**	**0.2**	**0.1**	**9.5**	**267,088**	**266,499**	**526,991**	
LAUNCH VEHICLE ADAPTER	1	5.84	0.53	10%	5.31	5.31	0.0	0.0	-28.1	2,332	2,332	4,226	CALCULATED
AFT AKM ADAPTER	1	9.88	0.90	10%	8.98	8.98	0.0	0.0	-14.5	5,006	5,006	7,094	CALCULATED
FORWARD AKM ADAPTER	1	3.44	0.31	10%	3.13	3.13	0.0	0.0	-1.4	1,284	1,284	2,537	CALCULATED
BUS THRUST TUBE	1	25.35	2.30	10%	23.05	23.05	0.0	0.0	21.0	22,032	22,032	17,391	CALCULATED
INSTRUMENT INTERFACE DECK	1	5.24	0.48	10%	4.76	4.76	0.0	0.0	42.7	4,551	4,551	9,101	CLEMENTINE, SCALED
ELECTRONICS DECK	1	6.24	0.57	10%	5.67	5.67	0.0	0.0	4.6	6,940	6,940	13,878	CLEMENTINE, SCALED
ENCLOSURE PANELS	6	13.47	1.22	10%	12.25	2.04	0.0	0.0	23.6	26,740	26,740	47,225	CLEMENTINE, SCALED
INSTRUMENT SUPPORT PANELS	3	11.23	1.02	10%	10.21	3.40	0.0	0.0	27.5	11,964	11,964	19,573	CLEMENTINE, SCALED
LONGERONS	6	5.09	0.46	10%	4.63	0.77	0.0	0.0	23.6	13,303	13,303	2,382	CLEMENTINE, SCALED
DECK ANGLES	12	3.59	0.33	10%	3.26	0.27	0.0	0.0	23.6	10,301	10,301	14,764	CLEMENTINE, SCALED
THRUSTER BRACKETS	8	0.40	0.04	10%	0.36	0.05	0.0	0.0	23.6	1,886	902	1,887	CLEMENTINE, SCALED
OMNI ANTENNA SUPPORT ARM	1	0.65	0.06	10%	0.59	0.59	30.3	17.5	2.7	0	0	0	CLEMENTINE, SCALED
MISCELLANEOUS HARDWARE	1	5.44	0.91	20%	4.53	4.53	0.0	0.0	25.5	0	0	0	ESTIMATED
BALANCE MASS	1	13.61	2.27	20%	11.34	11.34	0.0	0.0	4.0	150,000	150,000	400,000	ESTIMATED
RCS SUBSYSTEM		**528.59**	**33.93**	**NA**	**494.66**	**NA**	**0.0**	**0.0**	**3.3**	**65,106**	**62,457**	**13,653**	
AKM	1	455.80	21.70	5%	434.10	434.10	0.0	0.0	0.9	148,983	148,983	106,023	CALCULATED
PROPELLANT TANK	1	8.98	0.82	10%	8.16	8.16	0.0	0.0	31.7	0	0	0	CLEMENTINE, SCALED
PROPELLANT	1	49.90	9.98	25%	39.92	39.92	0.0	0.0	31.7	4,039	4,039	4,039	CALCULATED
PRESSURE TRANSDUCER	1	0.75	0.07	10%	0.68	0.68	0.0	0.0	25.5	0	0	0	CLEMENTINE, SCALED
VALVES	1	2.00	0.18	10%	1.82	1.82	0.0	0.0	25.5	0	0	0	CLEMENTINE, SCALED
THRUSTERS	8	2.86	0.14	5%	2.72	0.34	0.0	0.0	25.0	8,645	5,996	9,614	CLEMENTINE
SAFE / ARM CONTROLLER	1	2.86	0.14	5%	2.72	2.72	0.0	0.0	25.5	0	0	0	CLEMENTINE
MISCELLANEOUS HARDWARE	1	5.44	0.91	20%	4.53	4.53	0.0	0.0	15.0	0	0	0	ESTIMATED

Current Baseline/Approach (3 of 6)

- **Concept Study Report (CSR) Design**
  - **Mass Properties (2 of 3)**

SUBSYSTEM COMPONENT	TOT QTY	TOTAL MASS (kg)	UNCERT MASS (kg)	UNCERT MASS (%)	TOT UNIT MASS (kg)	UNIT MASS (kg)	CENTER OF GRAVITY X cg (m)	CENTER OF GRAVITY Y cg (m)	CENTER OF GRAVITY Z cg (m)	INERTIA ABOUT COMP CG Ixx (kg*m^2)	INERTIA ABOUT COMP CG Iyy (kg*m^2)	INERTIA ABOUT COMP CG Izz (kg*m^2)	COMMENTS
ADCS SUBSYSTEM		**12.01**	**1.51**	**NA**	**10.50**	**NA**	**-5.8**	**-4.0**	**23.6**	**6,324**	**7,134**	**2,317**	
IMU	1	0.79	0.04	5%	0.75	0.75	0.0	0.0	25.5	0	0	0	CLEMENTINE
SUN SENSOR	4	1.63	0.27	20%	1.36	0.34	0.0	0.0	25.5	0	0	0	FAME-98 MANIFEST
SUN SENSOR ELECTRONICS	1	1.36	0.23	20%	1.13	1.13	0.0	0.0	25.5	0	0	0	FAME-98 MANIFEST
STAR TRACKER	1	3.33	0.16	5%	3.17	3.17	0.0	0.0	60.0	0	0	0	CT-633, OFF THE SHELF
PASSIVE NUTATION DAMPER	1	3.27	0.55	20%	2.73	2.73	-25.5	-17.7	5.9	0	0	0	ESTIMATED
MISCELLANEOUS HARDWARE	1	1.63	0.27	20%	1.36	1.36	0.0	0.0	15.0	0	0	0	ESTIMATED
MECHANISM SUBSYSTEM		**52.97**	**5.50**	**NA**	**47.47**	**NA**	**1.6**	**0.9**	**5.0**	**239,514**	**240,901**	**437,464**	
LAUNCH SEPARATION SYSTEM	1	2.25	0.20	10%	2.05	2.05	0.0	0.0	0.0	0	0	0	CLEMENTINE, SCALED
AKM SEPARATION SYSTEM	1	2.25	0.20	10%	2.05	2.05	0.0	0.0	0.0	0	0	0	CLEMENTINE, SCALED
SOLAR ARRAY RELEASE SYSTEM	6	2.84	0.26	10%	2.58	0.43	0.0	0.0	25.5	0	0	0	CLEMENTINE, SCALED
OMNI ANTENNA RELEASE SYSTEM	1	0.30	0.03	10%	0.27	0.27	20.0	0.0	4.0	0	0	0	CLEMENTINE, SCALED
SUN SHIELD RELEASE SYSTEM	6	1.80	0.16	10%	1.64	0.27	0.0	0.0	23.0	0	0	0	CLEMENTINE, SCALED
SUN SHIELD (DEPLOYED)	6	8.16	1.36	20%	6.80	1.13	0.0	0.0	4.8	63,022	63,022	126,044	ESTIMATED
CENTER-OF-MASS TRIM MECHANISM	3	14.97	1.36	10%	13.61	4.54	0.0	0.0	33.3	7,709	7,709	1,445	CALCULATED
SUN SHIELD TRIM MECHANISM	6	10.48	0.95	10%	9.53	1.59	0.0	0.0	4.5	153,569	153,569	307,137	CALCULATED
ORDNANCE CONTROL UNIT	1	3.26	0.16	5%	3.10	3.10	25.3	14.6	8.5	105	93	141	CLEMENTINE
ORDNANCE HARNESS	1	1.25	0.11	10%	1.14	1.14	0.0	0.0	15.0	0	0	0	CLEMENTINE, SCALED
SOLAR ARRAY HINGES	6	2.69	0.24	10%	2.45	0.41	0.0	0.0	15.0	0	0	0	CLEMENTINE, SCALED
MISCELLANEOUS HARDWARE	1	2.72	0.45	20%	2.27	2.27	0.0	0.0	15.0	0	0	0	ESTIMATED

Current Baseline/Approach (4 of 6)

- **Concept Study Report (CSR) Design**
  - **Mass Properties (3 of 3)**

SUBSYSTEM COMPONENT	TOT QTY	TOTAL MASS (kg)	UNCERT MASS (kg)	UNCERT MASS (%)	TOT UNIT MASS (kg)	UNIT MASS (kg)	CENTER OF GRAVITY X cg (m)	CENTER OF GRAVITY Y cg (m)	CENTER OF GRAVITY Z cg (m)	INERTIA ABOUT COMP CG Ixx (kg*m^2)	INERTIA ABOUT COMP CG Iyy (kg*m^2)	INERTIA ABOUT COMP CG Izz (kg*m^2)	COMMENTS
COMMUNICATION SUBSYSTEM		**16.81**	**1.11**	**NA**	**15.70**	**NA**	**-6.4**	**3.6**	**5.6**	**2,279**	**4,583**	**5,118**	
TRANSPONDER	2	8.00	0.38	5%	7.62	3.81	-25.0	12.1	9.0	365	510	692	CLEMENTINE
DIPLEXER	2	1.33	0.06	5%	1.27	0.63	-19.1	22.1	6.5	0	0	0	CLEMENTINE
HYBRID/COUPLER	4	0.08	0.00	5%	0.08	0.02	0.0	0.0	23.5	0	0	0	CLEMENTINE
OMNI ANTENNA	3	1.80	0.16	10%	1.64	0.55	0.0	0.0	15.0	0	0	0	CLEMENTINE, SCALED
HIGH POWER AMP	2	3.10	0.15	5%	2.95	1.48	0.0	0.0	15.0	0	0	0	ICM
COAX CABLE	3	0.87	0.08	10%	0.79	0.26	0.0	0.0	15.0	0	0	0	CLEMENTINE, SCALED
MISCELLANEOUS HARDWARE	1	1.63	0.27	20%	1.36	1.36	0.0	0.0	15.0	0	0	0	ESTIMATED
CT&DH SUBSYSTEM		**14.69**	**1.96**	**NA**	**12.73**	**NA**	**0.0**	**15.0**	**10.7**	**4,288**	**458**	**4,221**	
SC CONTROLLER	1	8.20	1.37	20%	6.83	6.83	0.0	32.2	10.0	275	333	333	ESTIMATED
CABLES	1	6.49	0.59	10%	5.90	5.90	0.0	0.0	15.0	0	0	0	CLEMENTINE, SCALED

Current Baseline/Approach (5 of 6)

- **Current Baseline Designs (Two Hinge Design)**

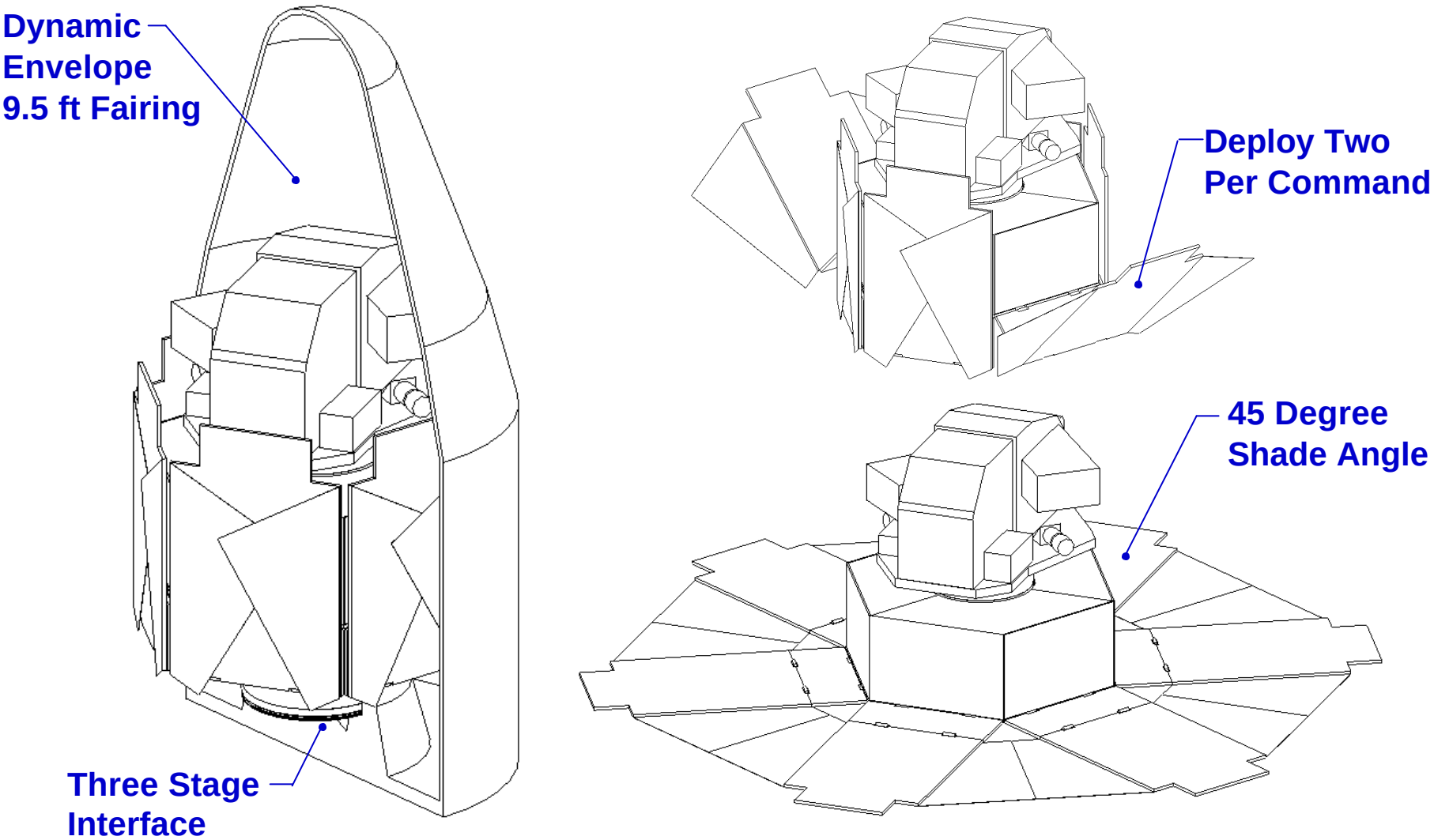

Current Baseline/Approach (6 of 6)

- **Current Baseline Designs (One Hinge Design)**

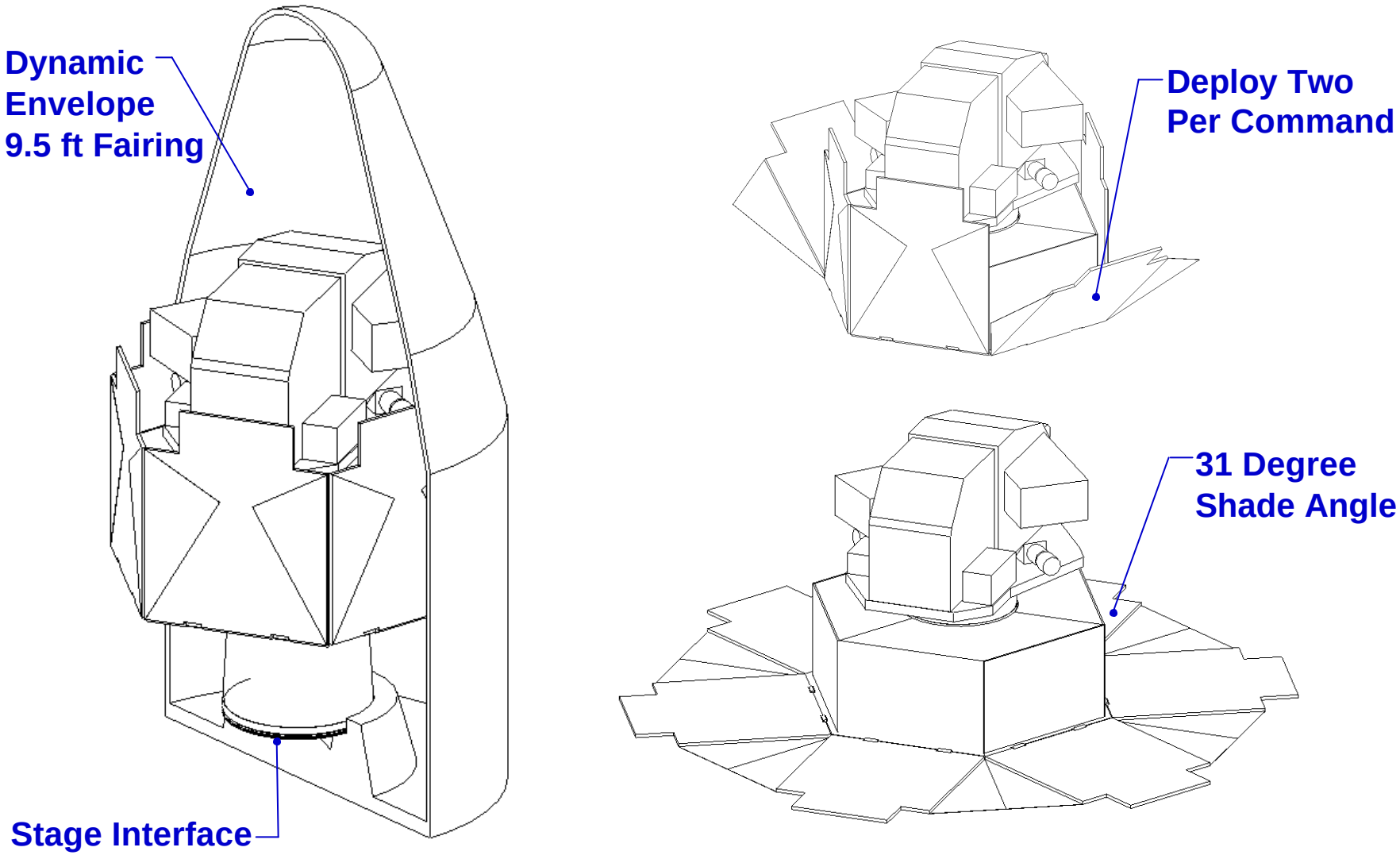

Trade Studies

- Single or Double Hinges Solar Array Trade
- Sun Shield Design Trade
- 9.5 ft or 10.0 ft Fairing Trade
- Overall Spacecraft in Fairing Layout Trade
- Spacecraft Bus Body Trade
- Deployable or Non-Deployable Omni Antenna Trade
- Star Tracker Location Trade
- Electronics Deck Layout Trade
- Third Stage Separation Trade
- Trim Tab Trade
- Instrument to Bus Interface Trade
- Trim Mass Trade
- Composite vs. Aluminum Structural Parts Trade
- Hexagon Body to Thrust Tube Structural Attachment Trade

Issues

- **Design and Verify Inertia Ratio Requirement**
- **Products of Inertia Requirement**
- **Budget Constraints**

Top Level Schedule

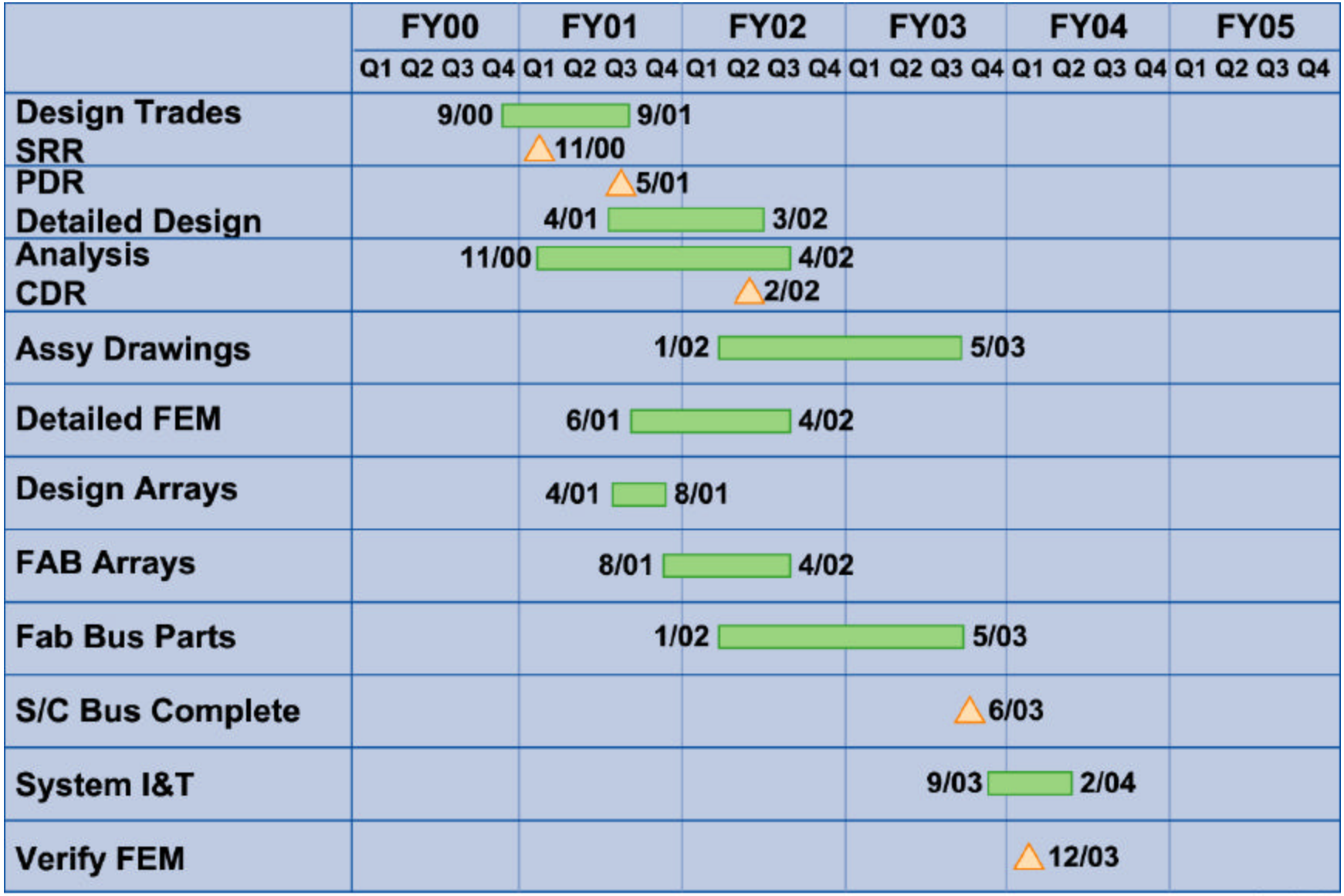

Struc Sched.ai