Full-sky Astrometric Mapping Explorer (FAME): Rescope Activities

K. Johnston (U.S. Naval Observatory), B. Dorland, R. Gaume, A. Hajian, F. Harris, H. Harris, G. Hennessy, G. Kaplan, S. Levine, D. Monet, J. Munn, M. Murison, J. Pier, S. Urban, N. Zacharias (U.S. Naval Observatory), P.K. Seidelmann (University of Virginia), J. Lee, V. Makarov, R. Olling (USNO/Universities Space Research Association), T. Codella (USNO/Tranquility Base Inc.), J. Geary, D. Latham, J. Phillips (Harvard-Smithsonian, CfA), M. Johnson (Naval Research Laboratory), R. Vassar, S. Horner (Lockheed Martin ATC)

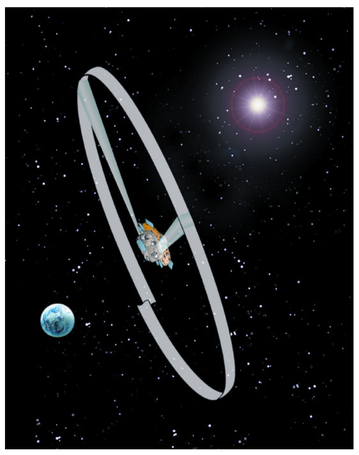

FAME Status:

- FAME was rescoped in Phase B in order to fit within cost, weight, power, & schedule requirements.
- FAME Preliminary Design Review (PDR) and Confirmation Review (CR) were held October/November 2001.
- FAME will not be proceeding into the implementation phase due to withdrawal of NASA sponsorship.
- The FAME project is currently reviewing options on how to proceed with the mission.

FAME Science:

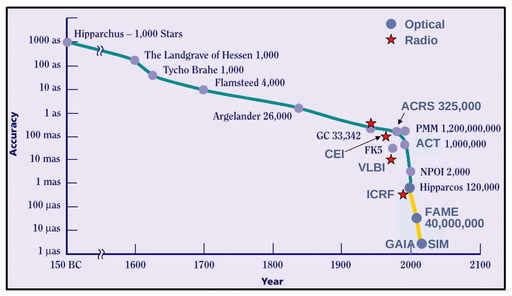

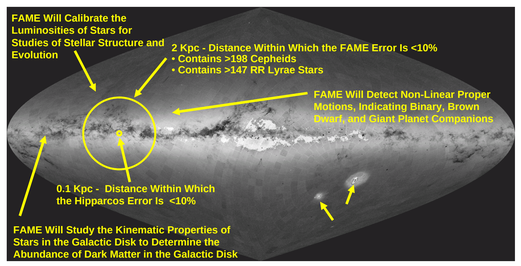

FAME Will Enable a Variety of Scientific Investigations:

- Determine Distances to Standard Candles Such As Cepheids and RR Lyrae Stars, and Calibrate Their Absolute Magnitudes to an Accuracy of 0.02 mag.
- Calibrate Stellar Masses and Luminosities in the Solar Neighborhood for a Variety of Applications in Stellar Astrophysics
- Provide a Definitive Determination of the Frequency of Brown Dwarf Companions in the Range of 10 to 80 Jupiter Masses; Determine Orbits for Brown Dwarfs and Giant Planets Down to 8 Jupiter Masses for a Sample of 20,000 Stars Within 100 pc
- Determine Memberships, Ages and Kinematics of Individual Stars in Star-Forming Regions Out to Distances of at Least 1 kpc
- Provide Astrometric and Photometric Results for 40 Million Stars for Applications in Galactic Structure and Evolution

FAME Science Requirements

Astrometry:

- 50 µas Accuracy in Position, 70 µas/yr in Parallax and Proper Motion for 9th Magnitude Stars
- Astrometric Accuracy Degraded As a Function of Photon Noise to <500 µas at 15th Magnitude

Photometry:

Millimagnitude Precision at 9th Magnitude in Astrometric Band

5 mmag in Sloan Bands

Impact of Rescope:

5 Year Mission Needed to Achieve Science Requirements instead of original 2.5

FAME Orbit: Launch to Operations

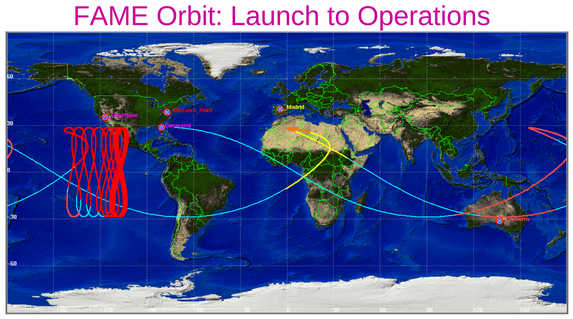

FAME Operational Configuration

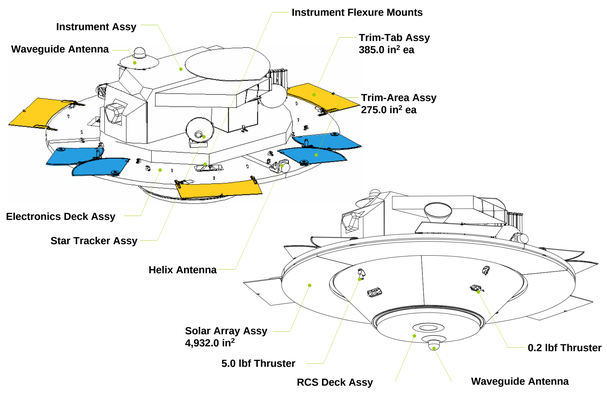

FAME Instrument Layout

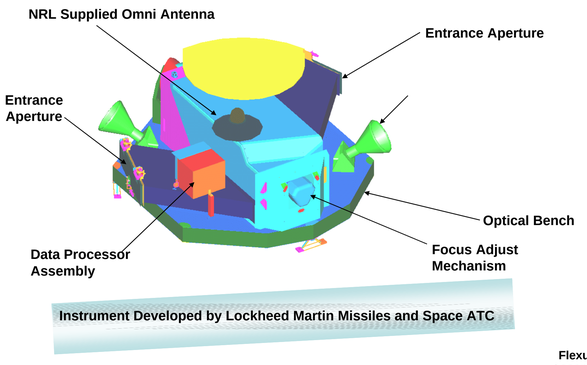

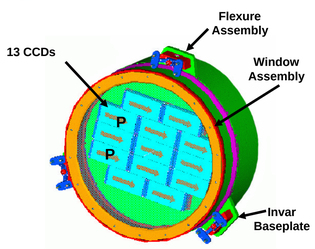

- The FAME Focal Plane
  - 13 2k·4k CCDs Arranged Within a 1.1° Diameter Field of View
  - Devices Marked With 'P' Are the 2 Photometric CCDs and the Rest Are the 11 Astrometric CCDs

FAME Rescope vs. FAME Classic:

Observatory Parameters

Item	FAME Classic	FAME Rescope
Launch Vehicle	Delta II 7425	Delta II 7425
Launch Capability	1132 kg	1110 kg
Apogee Kick Motor	Star 30BP	Star 30BP
FAME Mass	1031 kg	1123 kg (Includes 100 kg Uncertainty)
Orbit	GEO, 88° West	GEO ± 500km, 105.5° West
Mission Lifetime	2.5 Yr, 5 Yr (Extended)	5 Yr
Observatory Rotation	40 Minutes	40 Minutes
Precession Period	20 Days	20 Days
Sun Angle	45°	35°

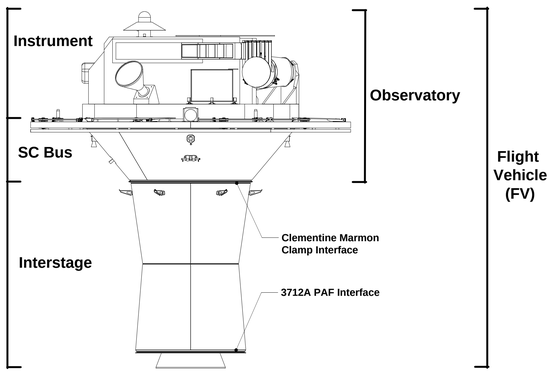

Instrument Parameters

Item	FAME Classic	FAME Rescope
Optics Design	Three Mirror Anastigmat	Cassegrain
Apertures	2	2
Optical Surfaces	9 Reflecting, 4 Transmitting	4 Reflecting, 12 Transmitting
Aperture Size	60 X 25 cm	40 X 9 cm
Primary Mirror Size	60 X 58 cm	47 X 42.6 cm
Focal Length	15 M	10.5 M
Diffraction Width	0.413 Arc-sec @ 600 nm (2 Pixels)	0.722 Arc-sec @ 700 nm (2.5 Pixels)
Focal Plane Scale	0.01375 Arc-sec/micron	0.01965 Arc-sec/micron
Focal Plane FOV	1.15°	1.25°
Wavelength Range	400 to 900 nm	550 to 850 nm
Magnitude Range	5th to 15th	5th to 15th
Stray Light	External Baffle, Internal Baffle (Intermediate Focus)	External Baffle (No Intermediate Focus)

Item	FAME Classic	FAME Rescope
CCDs	24	13
CCD Size	4096 X 2048 Pixels	4096 X 2048 Pixels
Pixel Size	15 Microns	15 Microns
Pixel on Sky	0.206 Arc-sec	0.295 Arc-sec
CCD Star Transit	1.56 Sec	2.24 Sec
Faint Star Astrometric CCDs	14	11
Bright Star Astrometric CCDs	3 (Neutral Density A), 3 (Neutral Density B)	11
Photometric CCDs	4 (Sloan G', R', I', Z')	2 (Sloan R', I')
Data Windows (Cols X Rows)	20 X 10 Pixels	24 X 13, 60 X 30 Pixels
CCD Binning	None, or X 20 Cols	Any Even # of Cols

Astrometry/Photometric Accuracies

Item	FAME Classic	FAME Rescope
Single Measurement Accuracy	580 Microarcseconds	840 Microarcseconds
Avg. Number of Obs. Faint Astrometric CCDs	793 (2.5 Yr), 1587 (5 Yr) (14 CCDs)	946 (2.5 Yr), 1892 (5 Yr) (11 CCDs)
Avg. Number of Obs. Bright Astrometric CCDs	170 (2.5 Yr), 340 (5 Yr) (3 CCDs Per Type of ND Fltr)	946 (2.5 Yr), 1892 (5 Yr) (11 CCDs)
Avg. Number of Obs. Photometric CCDs(Per Available Band)	57 (2.5 Yr), 113 (5 Yr) (4 Bands, 4 CCDs)	86 (2.5 Yr), 172 (5 Yr) (2 Bands, 2 CCDs)
Mission Astrometric Accuracy, (Position, Proper Motion, Parallax)	50 µas , 50 µas/yr , 50 µas (9th Magnitude)	50 µas , 70 µas/yr , 50 µas (9th Magnitude)
Mission Photometric Accuracy @ 9th Mag.	1 Millimagnitude	1 Millimagnitude

2 ½ yr	min	med	avg	max	50 µas %
N	393	750	793	1628	---
Parallax	21	41	39	56	93
Long.	17	42	37	53	100
Lat.	18	31	30	39	100
vlong	22	58	50	77	42
vlat	27	43	42	55	99

5 yr	min	med	avg	max	50 µas %
N	905	1467	1587	3186	---
Parallax	15	28	27	37	100
Long.	12	29	25	34	100
Lat.	15	21	21	24	100
vlong	8	21	18	25	100
vlat	8	15	15	19	100

Number of Observations (N); Errors in Parallax, Ecliptic Latitude/Longitude, & Proper Motion for FAME Classic (top) and FAME Rescope (bottom). The last column in each table indicates the % observations with accuracies better than 50 µas.

2 ½ yr	min	med	avg	max	50 µas %
N	392	794	946	2668	---
Parallax	24	63	58	86	35
Long.	19	72	60	91	29
Lat.	24	37	37	52	100
vlong	24	97	83	126	23
vlat	33	52	52	74	39

5 yr	min	med	avg	max	50 µas %
N	940	1588	1892	5127	---
Parallax	17	44	40	57	67
Long.	13	50	41	57	55
Lat.	18	26	25	32	100
vlong	9	35	29	44	100
vlat	11	18	18	25	100

FAME Observation Concept

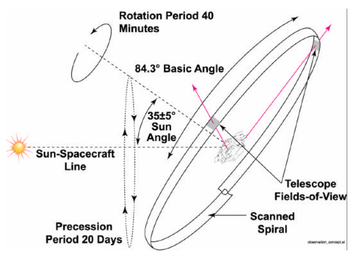

- Telescope Produces Images of Stars on 13 Large Format CCDs
  - Images of Stars Are Continually Traversing CCD Array As the Spacecraft Rotates
  - CCDs Use Time Delay Integration
  - Synchronization of CCD Clock Rate and Image Motion Is Assured Via Rotation Rate Sensors
  - Star Images Are Windowed, Time Tagged, and Transmitted to Earth
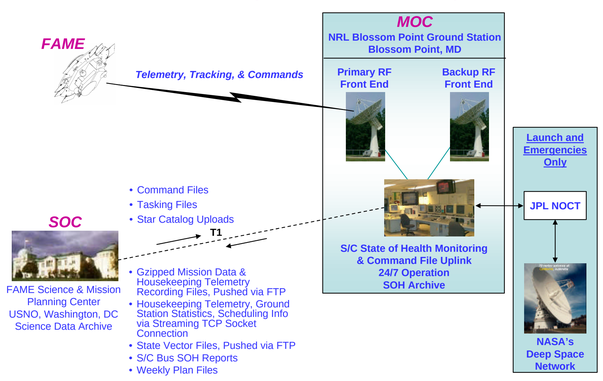
FAME Operations Concept